# SERVICE MANUAL

## SYNC MASTER 3NI COLOR MONITOR

## MODEL NO. : CSJ4927

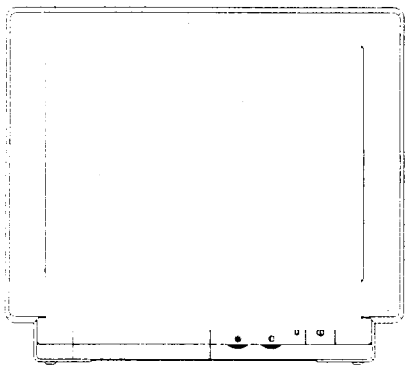

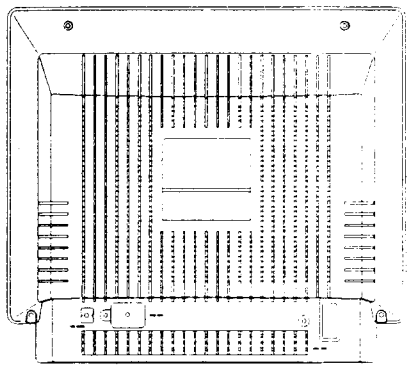

## SPECIFICATIONS

- Picture Tube
  14" 0.28mm Pitch Dot Screen. 90 Degree Deflection.
  Semi-tint, anti-glare. Medium Short Persistence Phosphor.
  High Contrast Type Black Matrix.

- Input Signal
  Video : Analog 0.7vp-p or 1.0vp-p Positive.
  at 75 ohm Terminated.
  Sync : Separate Sync. TTL Level.
  Horizontal Sync. Positive / Negative.
  Vertical Sync. Positive / Negative.
  Composite Sync : TTL Level.
  Positive / Negative.
  Sync. on Green : Composite Sync. 0.3 Vp-p Negative.
  Video 0.7vp-p Positive.

- Display Colors
  Analog Input : Unlimited Colors.

- Synchronization
  Horizontal : 30KHz to 58KHz (Automatically).
  Vertical : 50Hz to 90Hz (Automatically).

- Resolution
  Horizontal : 1024 Dots.
  Vertical : 768 Lines.

- Video Band Width : 75 MHz Max.

- Active Display
  Horizontal : 240mm ±5mm.
  Vertical : 180mm ±5mm.
  * Active Display Area is Changed by Signals Timming.

- Power Supply (Manual Selectable S/W)
  AC 120V, 60Hz (U.S.A Version).
  AC 220/240V, 50Hz (European Version).

- Power Consumption : 90Watt. Max.

- Environmental Consideration.
  Operating Temperature 0°C to +40°C.
  Humidity 30% to 80%.
  Storage Temperature -20°C to +60°C.
  Humidity 10% to 90%.

- Dimension
  Unit(mm) : 357(W) x 367(H) x 401(D)mm.
  Carton(mm) : 457(W) x 461(H) x 419(D)mm.

- Weight
  NET : 14.5kg.
  GROSS : 16.8kg.

**DESIGNS and SPECIFICATIONS are subjected to change without NOTICE.**

## WARNING DIAGRAM AND ADJUST PARTS LOCATION

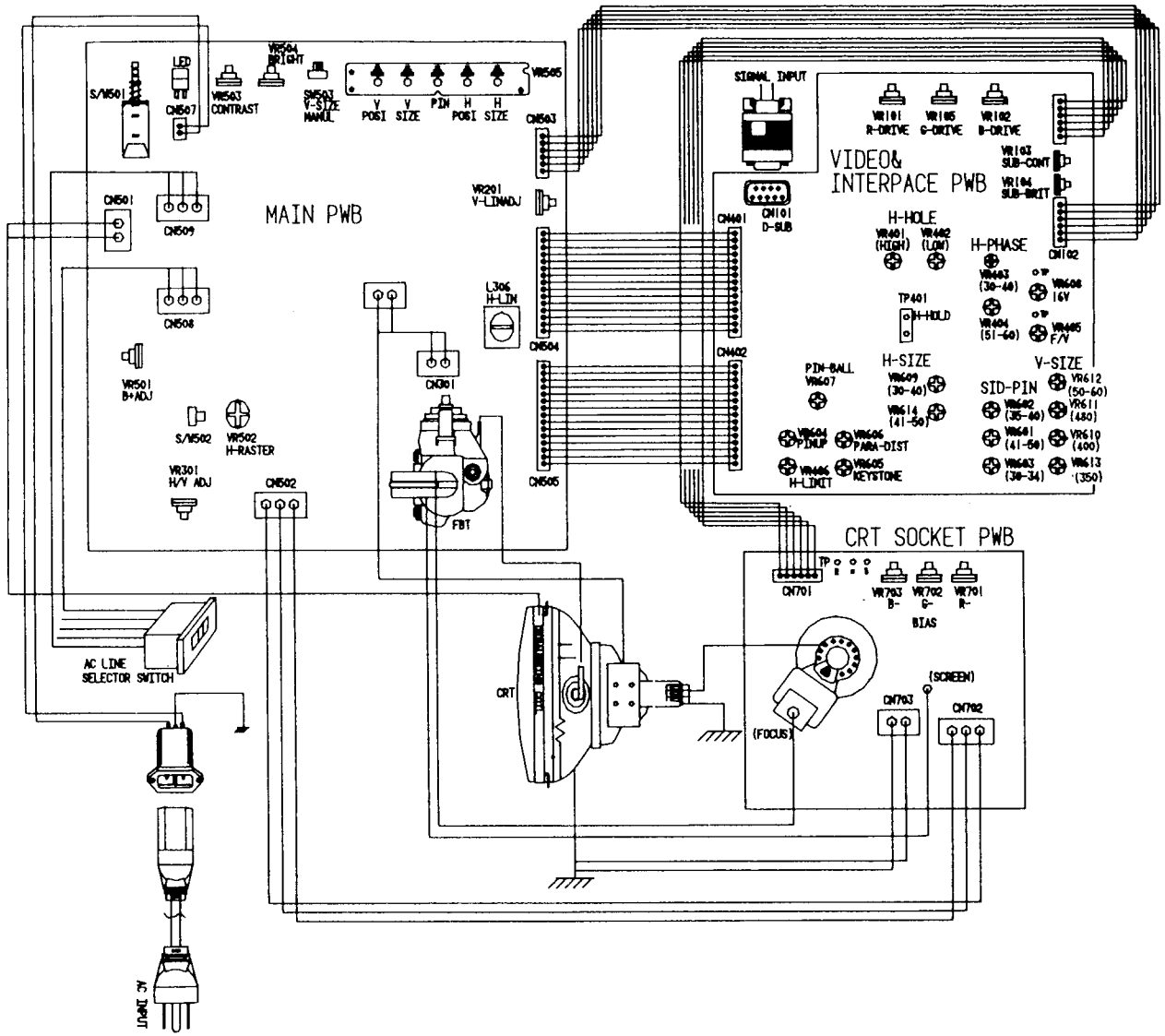

## ALIGNMENT PROCEDURE

### ADJUSTMENT CONDITIONS AND PRECAUTIONS

- POWER SUPPLY VOLTAGE : AC 120V or AC 220/240V (60Hz/50Hz).
- WARM UP TIME : The display must be on for 20 minutes before starting alignment. This is especially critical in color temparature and white balance adjustments.
- SIGNAL VIDEO : Analog 0.7Vp-p Positive at 75 ohm Terminated.
- SYNC ON GREEN : Video : 0.7Vp-p Positive.
  Sync. : 0.3Vp-p Negative.
- SYNC : TTL level negative / positive, separate/composite.
- SCANNING FREQUENCY : (H) 30KHz - 58KHz (Automatically)
  (V) 50Hz - 90Hz (Automatically).

* Unless otherwise specified, adjust at VGA(480 Line) signals.

### *1. MAIN PWB PREPARE ADJUSTMENT*

1-1. +B (VR501) + 130V Line
Adjust VR501 to be 130 ±0.5V DC at TP-B+ and GND.

1-2 +BH (VR301) High voltage control
Adjust VR301 to be 23.0KV. (No Beam: Cont Min, Brit Min)

### *2. VIDEO PWB PREPARE ADJUSTMENT*

2-1. Adjust VR608 so that 16V ±0.05V DC is at TP-16 and GND.

2-2 Horizontal F/V converte control, receive VGA(480 LINE) and adjust so that the voltage between TP-F/V and GND is 6.5 ±0.05V DC.

2-3 H.HOLD ADJUSTMENT.

a) Short TP401.
b) Apply VGA(40KHz) and adjust H.HOLD(HIGH) VR401 so that the entire picture appears.
c) Apply VGA (480LINE ) and adjust H.HOLD (LOW) VR402 so that the entire picture appears.
d) Open the TP401.

### *3. MAIN PWB ADJUSTMENT*

Unless otherwise specified, ajust the EXT-VR or S/W as show below.
VR503 (contrast): MAX(fully clockwise).
VR504 (brightness) : so that no background raster appers.

3-1. FRONT

| | | | |
|---|---|---|---|
| VR505 (H.position) | : CENTER | VR505 (V.position) | : CENTER |
| VR505 (H.size) | : CENTER | VR505 (V.size) | : CENTER |
| VR505 (Side pincushion) | : CENTER | SW503 (V-size manual s/w) | : AUTO |

3-2. REAR

INPUT signal : D-SUB 9 pin ANALOG level (0.7Vp-p).

Focus VR (FBT) : Adjust for the optimun picture. VGA (480 LINE), Pattern "H" or textual)

3-3.H.RASTER CENTER

1. Input a cross-hatch signal of 56kHz.
2. Display a back-raster on the screen with SCREEN VR (FBT)
3. Adjust VR303 (H.POSI) so that the back-raster position to come center.
4. In case of the back-raster is not move till center, using SW401 (H.RASTER SW).

3-4. V.LINEARITY

Adjust VR201 so that vertical linearity is optimum when signal of 56KHz is applied.

3-5. H.LINEARITY

Apply signal VGA (480 LINE) and adjust L306 for the optimum H.LINEARITY.

## 4. *ADJUSTMENT OF VIDEO PWB*

**Note:** Before performing this adjustment, check that the video signals are as follows.

Video : ANALOG 0.7Vp-p (at 75 ohm Terminated).

Synchronizing : Separate TTL level. Unless otherwise specified, use signal VGA(480 LINE) for the adjustments.

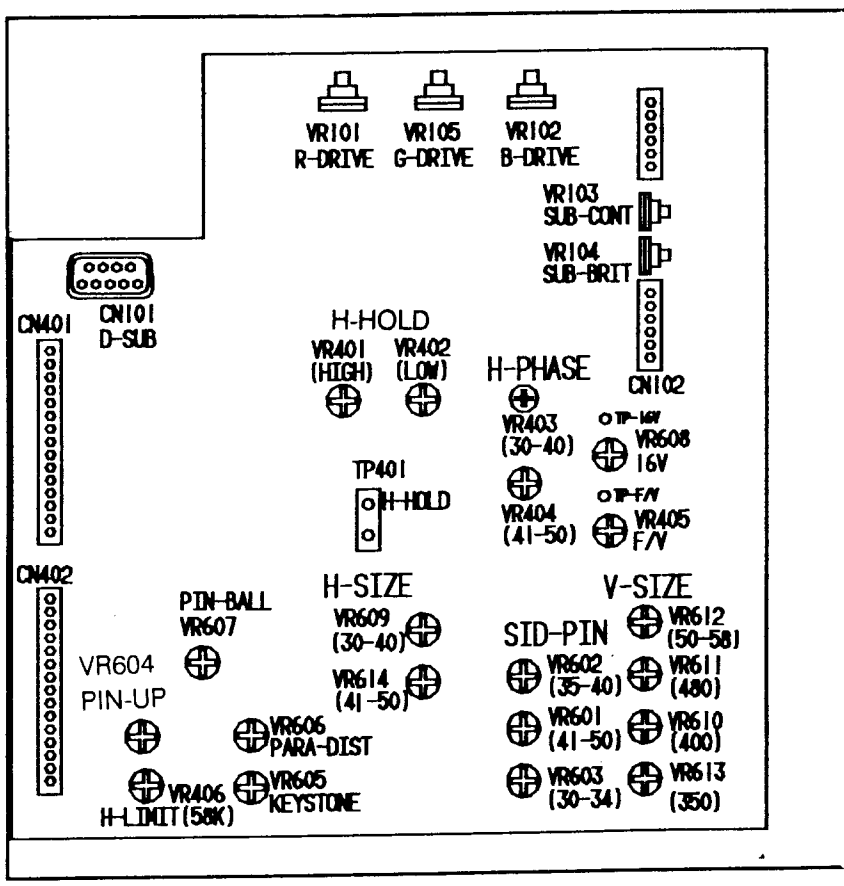


VR101: R-DRIVE
VR102: B-DRIVE
VR103: SUB-BRIT
VR104: SUB-CONT
VR105: G-DRIVE
VR401: H-HOLD (HIGH)
VR402: H-HOLD (LOW)
VR403: H-PHASE (30-40KHz)
VR404: H-PHASE (41-50KHz)
VR405: F/V ADJ
VR406: H-LIMIT (56KHz)
VR601: SIDE-PIN (41-50KHz)
VR602: SIDE-PIN (35-40KHz)
VR603: SIDE-PIN (30-34KHz)
VR604: PIN-UP
VR605: KEYSTONE
VR606: PARA DIST
VR607: PIN BALL
VR608: 16V ADJ
VR609: H-SIZE (30-40KHz)
VR610: V-SIZE (VGA 400LINE)
VR611: V-SIZE (VGA480LINE)
VR612: V-SIZE (58KHz)
VR613: V-SIZE (VGA 350LINE)
VR614: H-SIZE (41-50KHz)

4-1. H.POSITION (Adjust to the center of the picture)

a) Adjust EXT H Center VR to locate the picture to the raster center when signal 56KHz is applied.
b) Adjust sub H.center VR403 to locate the picture to the raster center when signal 31KHz is applied.
c) Adjust sub H.center VR404 to locate the picture to the raster center when signal 48KHz is applied.
d) Check that the picture is centered when the signal a) ,b), and c) above are applied.

4-2. H-SIZE

a) Adjust EXT H.SIZE VR to center-click position when 56KHz is applied.
b) Adjust sub H-LIMIT VR406 so that horizontal size is 240 ±5mm when 56KHz is applied.
c) Adjust sub H-SIZE VR609 so that horizontal size is 240 ±5mm when 31KHz is applied.
d) Adjust sub H-SIZE VR614 so that horizontal size is 240 ±5mm when 48KHz is applied.
e) Check that the picture is size when the signal a) ,b), c) and d) above are applied.

4-3. V-SIZE (SWITCH OVER AUTO SIZE SW TO AUTO POSITION))

a) Adjust EXT V-POSITION to the V-POSITION center also adjust EXT V-SIZE so that vertical size is 180±5mm when 48KHz is applied.
b) Adjust sub V-SIZE VR610 so that V-SIZE is 180mm ±5mm when 31KHz(400 Line) is applied.
c) Adjust sub V-SIZE VR611 so that V-SIZE is 180mm ±5mm when 31KHz (480 Line) is applied
d) Adjust sub V-SIZE VR613 so that V-SIZE is 180mm ±5mm 31KHz (350Line) is applied.
e) Adjust sub V-SIZE VR612 so that V-SIZE is 180mm ±5mm when 56KHz is applied.
f) Check that the picture is size when the signal a) ,b), c), d) and e) above are applied. (NO TOUCH EXT V-SIZE VR)

ATTENTION: DO NOT TOUCH EXT V-SIZE VR AND SWITCH OVER AUTO SIZE S/W TO ADJ. POSITION)

4-4. ADJUST EAST/WEST CORRECTION AND SIDE-PINCUSHION

Adjust VR606 (PARALLELOGRAM (PARA DIST)), VR605(KEYSTONE), VR607(PIN BAL) VR604(pin-up) and EXT SIDE-PIN VR to become best condition about 56KHz mode SIDE-PINCUSHION

1) Adjust sub SID-PIN VR601 so that pincushion strain about right and left when 48KHz is applied.
2) Adjust sub SID-PIN VR603 so that pincushion strain about right and left when 31K(480Line) is applied.
3) Adjust sub SID-PIN VR602 so that pincushion strain about right and left when 35K(8514/A) is applied.

- H.SIZE (VR406)
  Adjust VR406 (H.LIMIT) on video board so that the horizontal size to become 240 ±5mm.
  (CENTER POSITION EXT VR(H-SIZE)

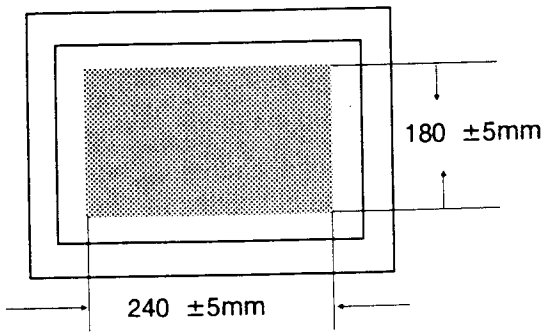

- PARA DIST (VR606)
  Adjust parallelogram strain with VR606(PARA DIST) on VIDEO board.

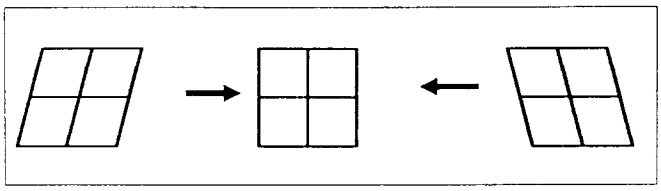

- KEYSTONE(VR605)
  Adjust trapezoidal strain with VR605(KEY-STONE)

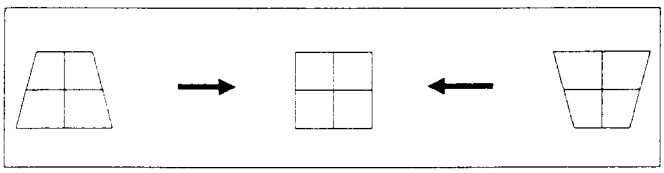

- SIDE PIN (VR601)
  Adjust pincushion strain abput right and left with VR601 (SIDE PIN) on VIDEO board.

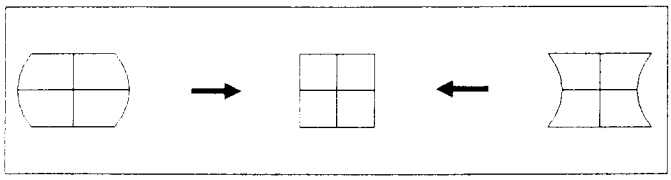

**NOTE:** In case of pincushion strain of right and left rate is differ, correct them with VR607 (PIN BAL) too.

- PIN BAL (VR607)
  Adjust PIN balance strain with VR607 (PIN BAL) on VIDEO board.

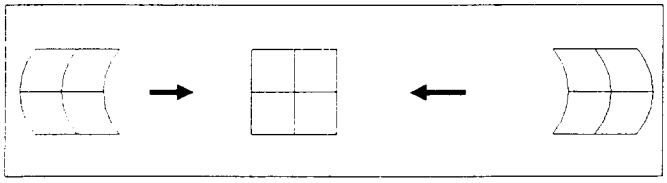

- PIN UP (VR604)
  Adjust pin up strain with VR607 (PIN UP) on VIDEO board.

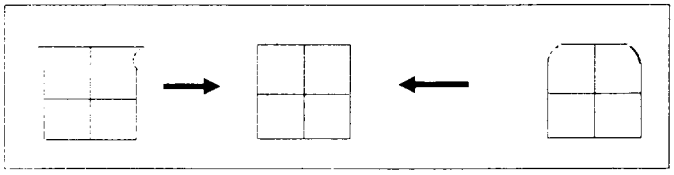

4-5. ADJUSTMENT OF VIDEO AMPLITUDE AND WHITE BALACE

1) Locate VR103 SUB CONT fully countclockwise, VR104 SUB BRIT controls to center position.
2) Locate VR101, 102, 105, GAIN controls to center position.
3) VR701, 702, 703 CUTOFF controls to center position.

- Video contrast adjustment

a) Adjust of gain control (31KHz)
(Window pattern full white)

1) Receive a window parrern (within a range for which VGA does not active even though maximum contrast state, and preferably with a video range of 1/3 to 1/2H x 1/2V).
2) Turn the contrast control (VR503) fully clockwise and the brightness control (VR504) fully counterclockwise.
3) Adjust VR101, VR102, and VR105 so that R,G and B OUT respectively on the video PWB become 35 Vp-p. After adjusting, check each Vp-p, and if not proper, readjust VR101, VR102 and VR105.

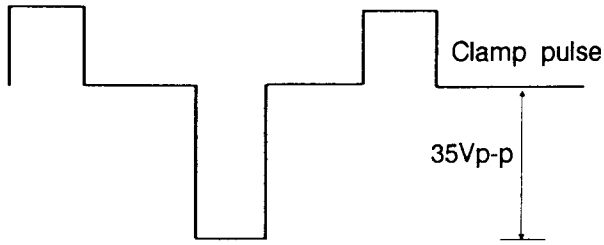


- Fine adjustment of white balance (X=0.281. ±0.03, Y=0.311 ±0.03)

a) Receive the white window parrern. (Window pattern .... Within a range for which a range for which ABL does not function).

b) Turn the contrast control (VR503) fully clockwise. (at 20 ft) Adjust the brightness control (VR504) so that no background raster appears and check that the white balance is proper for each grade. If the white balance is off for the upper grades, fine adjust the gain control, VR101 and VR103 to match the white.

**ATTENTION: DO NOT TOUCH VR105-G GAIN.**

c) Turn the control (VR503) fully counterclockwise and the brightness control (VR504) clockwise. (At 5 ft) Check that the white balance proper for each grade. (X=0.281, Y=0.311) Adjustment VR701, VR703.

**ATTENTION: DO NOT TOUCH VR702-G SUB CONT.**

If the background raster and the white for the different grades are off, fine adjust sub bright VR104, VR106 and VR108 (X or Y, ±0.03)

## 5. *FOCUS ADJUSTMENT*

Turn the contrast control (EXT VR503) fully clockwise and set the brightness control (EXT VR504) to a suitable (20fT) position. SVGA (56KHz) Pattern "H") Adjust the focus control to the optimum position using character pattern.

## 6. *PURITY ADJUSTMENT*

6-1. Be sure that the display is not be exposed to any external magnetic fields.

6-2. Ensure that the spacing between the Purity Convergence Magnet (PCM), assembly and the CRT stem is 29mm ±1mm.

6-3. Produce a complete, red pattern on display. Adjust the purity magnet rings on the PCM assembly to obtain a complete field of the color red. This is done by moving the two tabs in such a manner that they advance in an opposite direction but at the same time to obtain the same angle between the two tabs, which should be approximately 180°.

6-4. Check the complete blue and complete green patterns to observe their respective color purity.
Make minor adjustments if needed.

## 7. *CONVERGENCE ADJUSTMENT*

7-1. Produce a magenta (Red +Blue) crosshatch on the display.

7-2. Adjust the focus for the best overall focus on the display. Also adjust the brightness to the desired condition.

7-3) Vertical red and blue lines are converged by varying the angle between the two tab of the 4-Pole magnets on the PCM assembly.

7-4. Horizontal red and blue lines are converged by varying the two tabs together, keeping the angle between them constant.

7-5. Produce a white crosshatch pattern on the display.

7-6. Vertical green and magenta lines are converged by varying the angle between the two tabs of the 6-Pole magents.

7-7. Horizontal green and magenta lines are converged by varying the two tabs together, keeping the angle between them constant.

NOTE : Refer to the pictures of next page for detaied adjustment method.

## CONVERGENCE ADJUSTMENT

### CORRECTION METHODS

### A. STATIC CONVERGENCE CORRECTION

static convergence can be corrected by the convergence magnet equiped on the neck of tube as following.

4 pole magnet : converge red to blue

6 pole magnet : converge red/blue to green

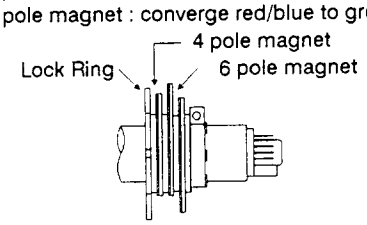


### B. DYNAMIC CONVERGENCE CORRECTION

1) PATTERN-1...Xv-correcting differential sub-coil

in case of following pattern, Xv-correcting differential sub-coil is suitable for the precise correction.

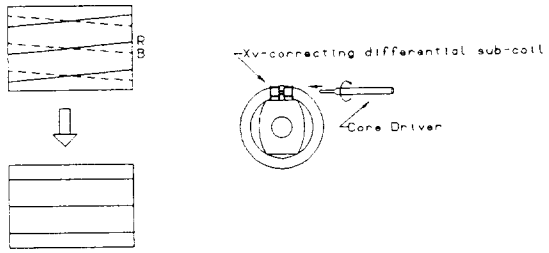


2)PATTERN-2..'BOW PATTERN' correctioni magnets (Apair of 4-pole magnet ring equiped just behind the back mold of the deflection yoke) is suitable for the precise correction.

BOW PATTERN

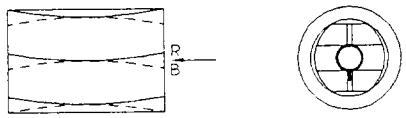


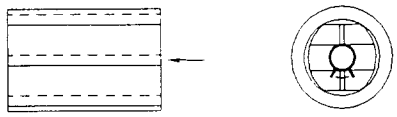

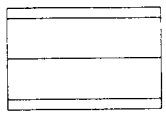

Adjust static convergence as ususl

Note : It is recommended horizontal component of static convergence is kept to "ZERO".

3)PATTERN-3...iron piece (C , D , E )

In case of following patterns, iron piece should be applied as shown below.

Suitable size of iron piece might be selected in accordance with the correcting level required.

Bigger one is stronger.

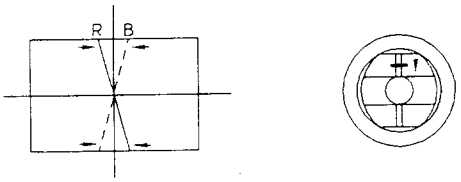


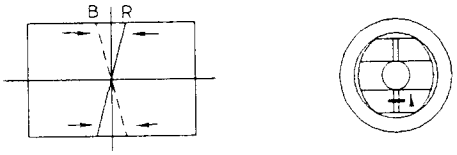


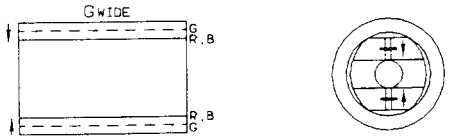


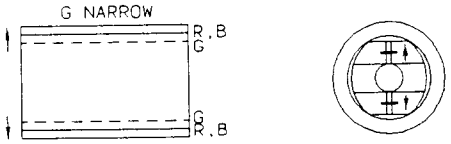


4) PATTERN-4...Coil rolled steel plate ( F )

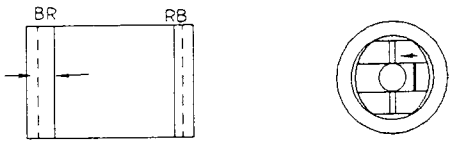


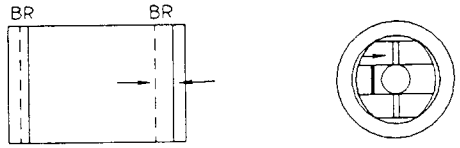

5) PATTERN-5...Iron piece ( D , E )
Suitable size of iron piece might be selected.
Bigger one ( D ) is stronger.

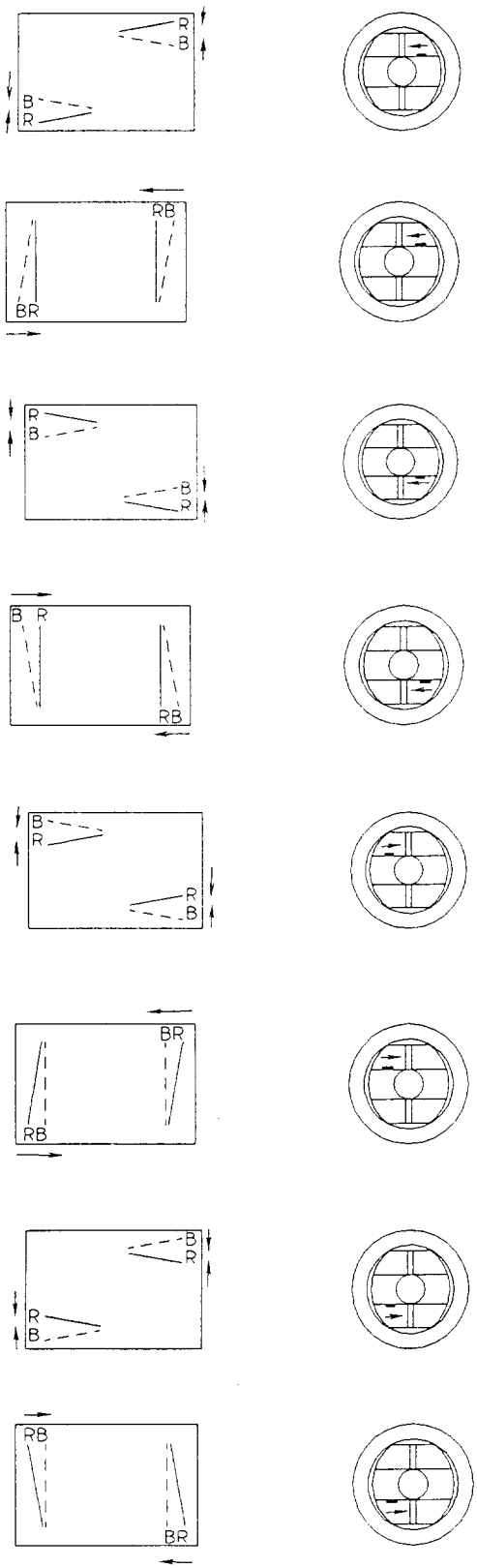


6) PATTERN-6...Magnet ( A , B )
If these patterns appear at the screen edge part, magnet is suitable for the correction (partial correction).
These correction should be made before purity adjustment or inspection

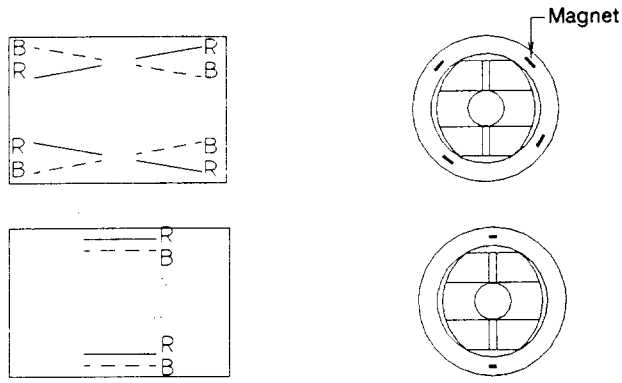


**DYNAMIC CONVERGENCE CORRECTION METHODE**

1) PATTERN-1...Xv-correcting differential sub-coilin case of following pattern. Xv-correcting differential sub-coil is suitable for the precise correction.

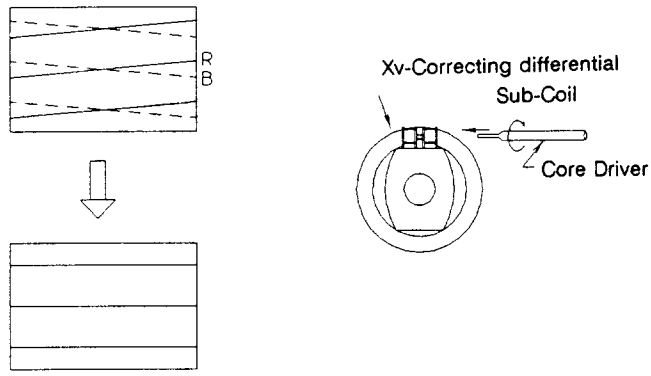


2) PATTERN-2...Yv-correcting variable resister in case of following pattern. Yv-correcting variable resister is suitable for the precise correction.

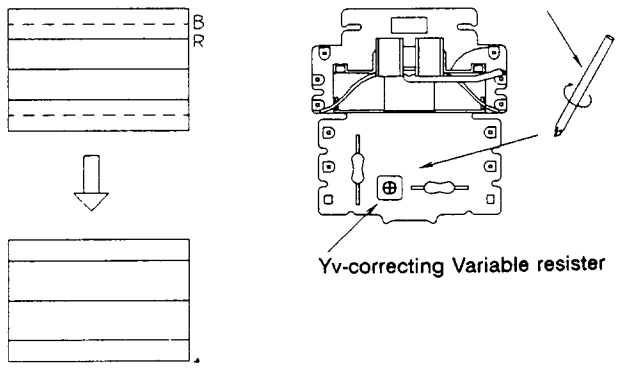

## 8. TIMING CHARTS

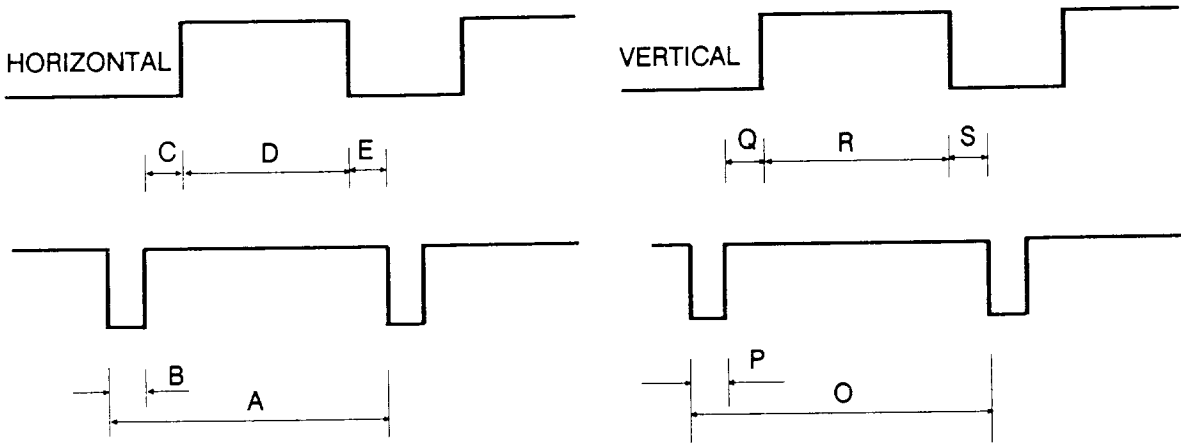


| MODE | XGA | | | | VESA | | | |
|---|---|---|---|---|---|---|---|---|
| TIMING | VGA1 | VGA2 | VGA3 | 8514/A | SVGA 60Hz | SVGA/56HZ | 48KHZ/60HZ | 56KHZ/70HZ |
| | 640x350 | 640x400 | 640x480 | 1024x768 | 800x600 | 800x600 | 1024x768 | 1024x768 |
| Fh | 31.5KHZ | 31.5KHZ | 31.5KHZ | 35.52KHZ | 37.879KHz | 35.156KHZ | 48.363KHZ | 56.476KHZ |
| Aus | 31.77 | 31.77 | 31.77 | 28.15 | 26.4 | 28.444 | 20.677 | 17.707 |
| Bus | 3.77 | 3.77 | 3.77 | 3.92 | 3.2 | 2.0 | 2.092 | 1.813 |
| Cus | 1.89 | 1.89 | 1.89 | 1.25 | 2.2 | 3.556 | 2.462 | 1.92 |
| Dus | 25.17 | 25.17 | 25.17 | 22.8 | 20.0 | 22.222 | 15.754 | 13.653 |
| Eus | 0.94 | 0.94 | 0.94 | 0.18 | 1.0 | 0.667 | 0.369 | 0.32 |
| Fv | 70HZ | 70HZ | 60HZ | 87HZ | 60.3165Hz | 56.25HZ | 60.000HZ | 70.069HZ |
| Oms | 14.27 | 14.27 | 16.68 | 11.5 | 16.579 | 17.778 | 16.667 | 14.272 |
| Pms | 0.064 | 0.064 | 0.064 | 0.113 | 0.106 | 0.057 | 0.124 | 0.106 |
| Qms | 1.88 | 1.08 | 1.02 | 0.563 | 0.607 | 0.626 | 0.6 | 0.513 |
| Rms | 11.126 | 12.716 | 15.246 | 10.81 | 15.84 | 17.067 | 15.88 | 13.599 |
| Sms | 1.2 | 0.41 | 0.35 | 0.014 | 0.026 | 0.028 | 0.062 | 0.053 |
| CLOCK FREQ. (MHZ) | 25.175 | 25.175 | 25.175 | 44.9 | 40.0 | 36.0 | 65.0 | 75.0 |
| REMARK | SEPARATE SYNC<br>H.SYNC POSITIVE<br>V.SYNC NEGATIVE | SEPARATE SYNC<br>H.SYNC NEGATIVE<br>V.SYNC POSITIVE | SEPARATE SYNC<br>H.SYNC NEGATIVE<br>V.SYNC NEGATIVE | INTERLACED SEPARATE SYNC<br>H.SYNC POSITIVE<br>V.SYNC POSITIVE | SEPARATE SYNC<br>H.SYNC POSITIVE<br>V.SYNC POSITIVE | SEPARATE SYNC<br>H.SYNC POSITIVE<br>V.SYNC POSITIVE | SEPARATE SYNC<br>H.SYNC NEGATIVE<br>V.SYNC NEGATIVE | SEPARATE SYNC<br>H.SYNC NEGA/POSI<br>V.SYNC NEGA/POSI |

## PIN ASSIGNMENTS AND SIGNAL LEVELS

### 1.PIN ASSIGNMENT OF GRAPHICS ADAPTER

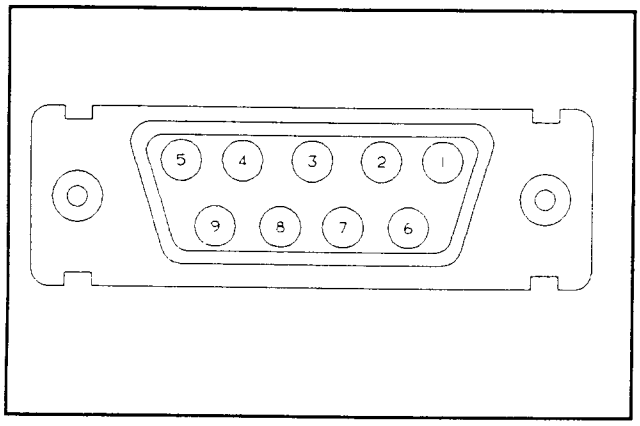


| PIN ASSISGNMENT | PROFESS GRAPHICS ANALOG |
|---|---|
| 1 | *RED |
| 2 | *GREEN |
| 3 | *BLUE |
| 4 | COMPOSITE SYNC |
| 5 | MODE CONTRL |
| 6 | RED GROUND |
| 7 | GREEN GROUND |
| 8 | BLUE GROUND |
| 9 | GROUND |

### 2.PIN ASSIGNMENT OF OTHER COMPUTERS(SAMSUNG)

| PIN ASSIGNMENT | ANALOG | | |
|---|---|---|---|
| | SEPARATE SYNC. | COMPOSITE SYNC | SYNC. ON GREEN |
| 1 | *RED | *RED | *RED |
| 2 | *GREEN | *GREEN | ** H/V SYNC. |
| 3 | *BLUE | *BLUE | *BLUE |
| 4 | H.SYNC | H/V SYNC | - |
| 5 | V.SYNC | LOW MODE | - |
| 6 | GND-R | GND-R | GND-R |
| 7 | GND-G | GND-G | GND-G |
| 8 | GND-B | GND-B | GND-B |
| 9 | GND-SYNC | GND-SYNC | GND-SYNC |

### 3.SIGNAL LEVEL

- All signal levels, except for those listed below, are TTL
- Signal level, below ANALOG is 0.7/1.0 Vp-p (VIDEO)
- "*"means 0.7Vp-p (VIDEO)
- "**" means 0.7Vp-p (VIDEO), 0.3vP-P (sync)

# TROUBLE SHOOTING

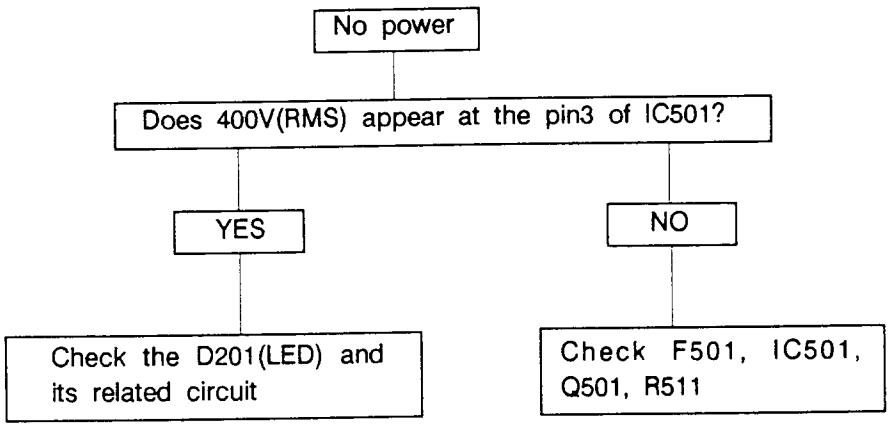


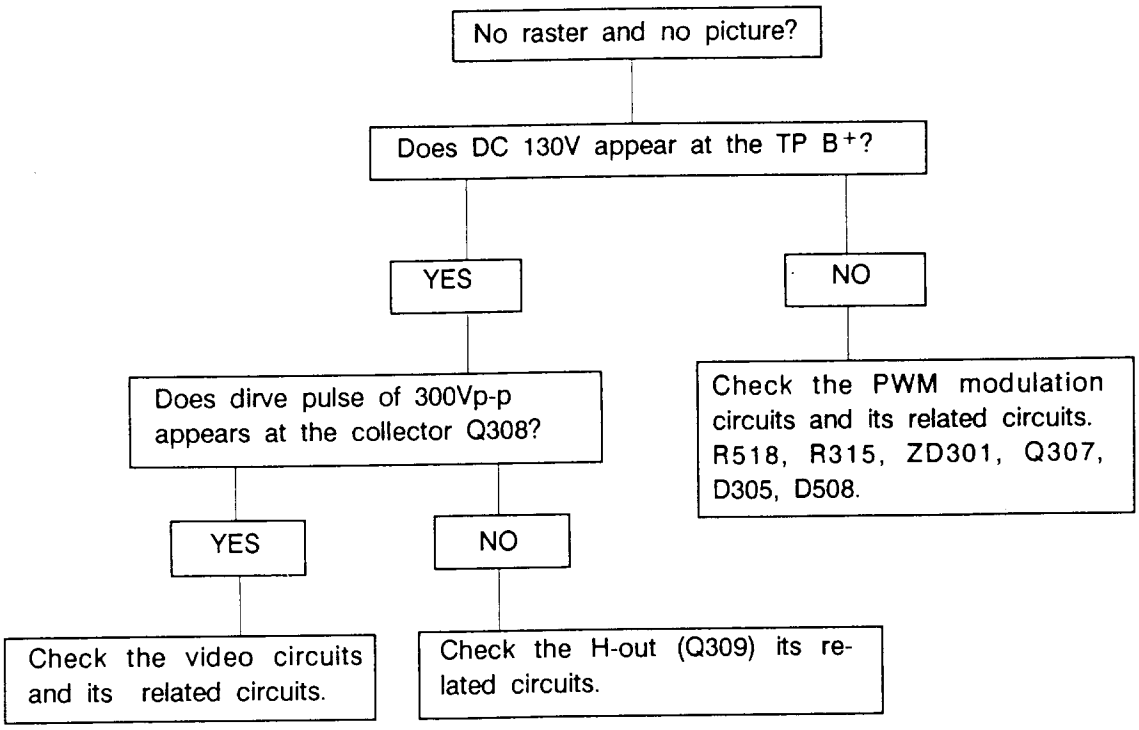


Circuit to be checked

1. No raster appears
   -.Power circuits-horizontal output circuits
2. A high voltage develops but no raster appears-video output circuits
3. A high voltage is not appeared

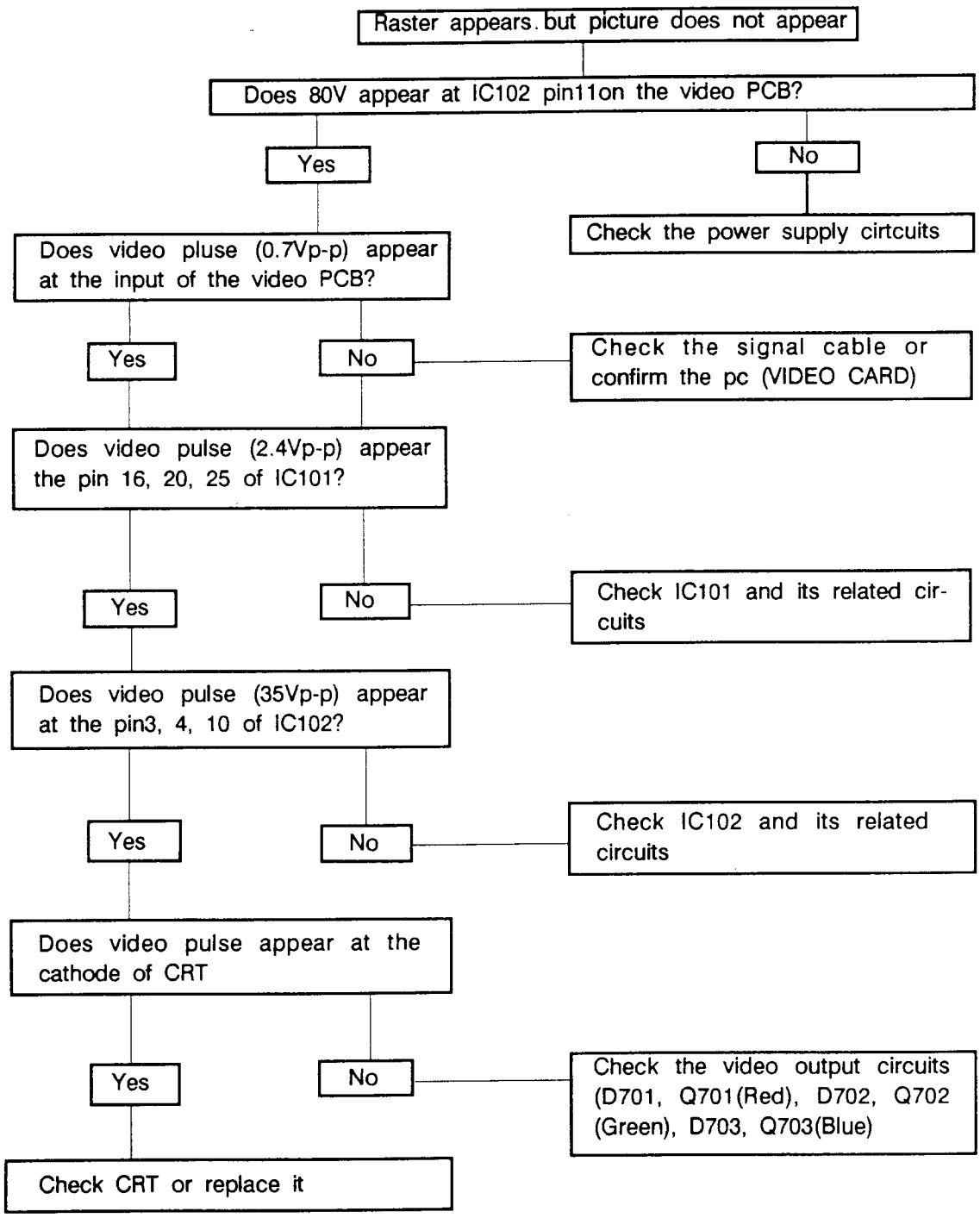
Raster appears. but picture does not appear
Does 80V appear at IC102 pin11on the video PCB?
Yes
No
Check the power supply cirtcuits
Does video pluse (0.7Vp-p) appear at the input of the video PCB?
Yes
No
Check the signal cable or confirm the pc (VIDEO CARD)
Does video pulse (2.4Vp-p) appear the pin 16, 20, 25 of IC101?
Yes
No
Check IC101 and its related circuits
Does video pulse (35Vp-p) appear at the pin3, 4, 10 of IC102?
Yes
No
Check IC102 and its related circuits
Does video pulse appear at the cathode of CRT
Yes
No
Check the video output circuits (D701, Q701(Red), D702, Q702 (Green), D703, Q703(Blue)
Check CRT or replace it

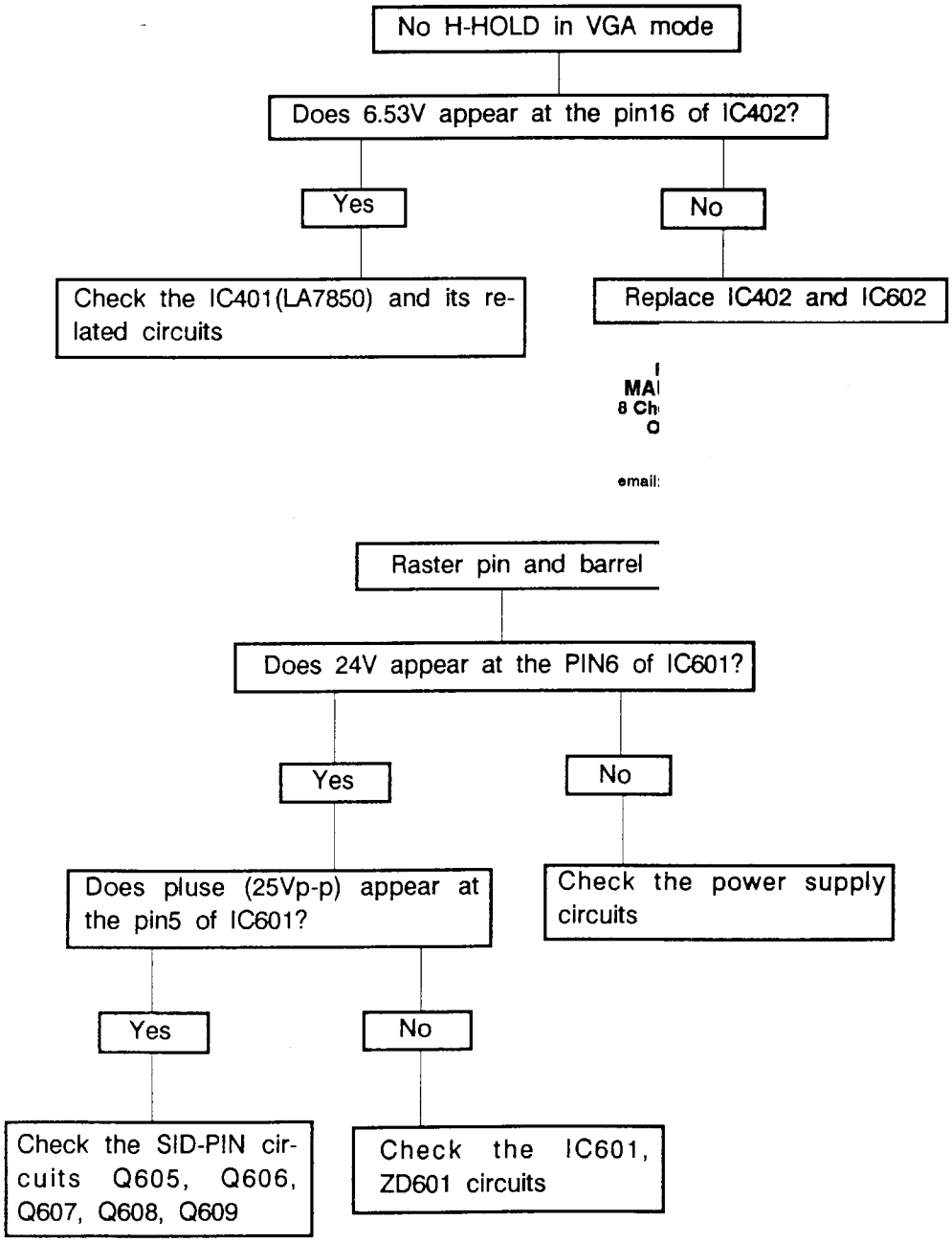
No H-HOLD in VGA mode
Does 6.53V appear at the pin16 of IC402?
Yes
No
Check the IC401(LA7850) and its related circuits
Replace IC402 and IC602
Raster pin and barrel
Does 24V appear at the PIN6 of IC601?
Yes
No
Does pluse (25Vp-p) appear at the pin5 of IC601?
Check the power supply circuits
Yes
No
Check the SID-PIN circuits Q605, Q606, Q607, Q608, Q609
Check the IC601, ZD601 circuits

# CSJ4927 BLOCK DIAGRAM

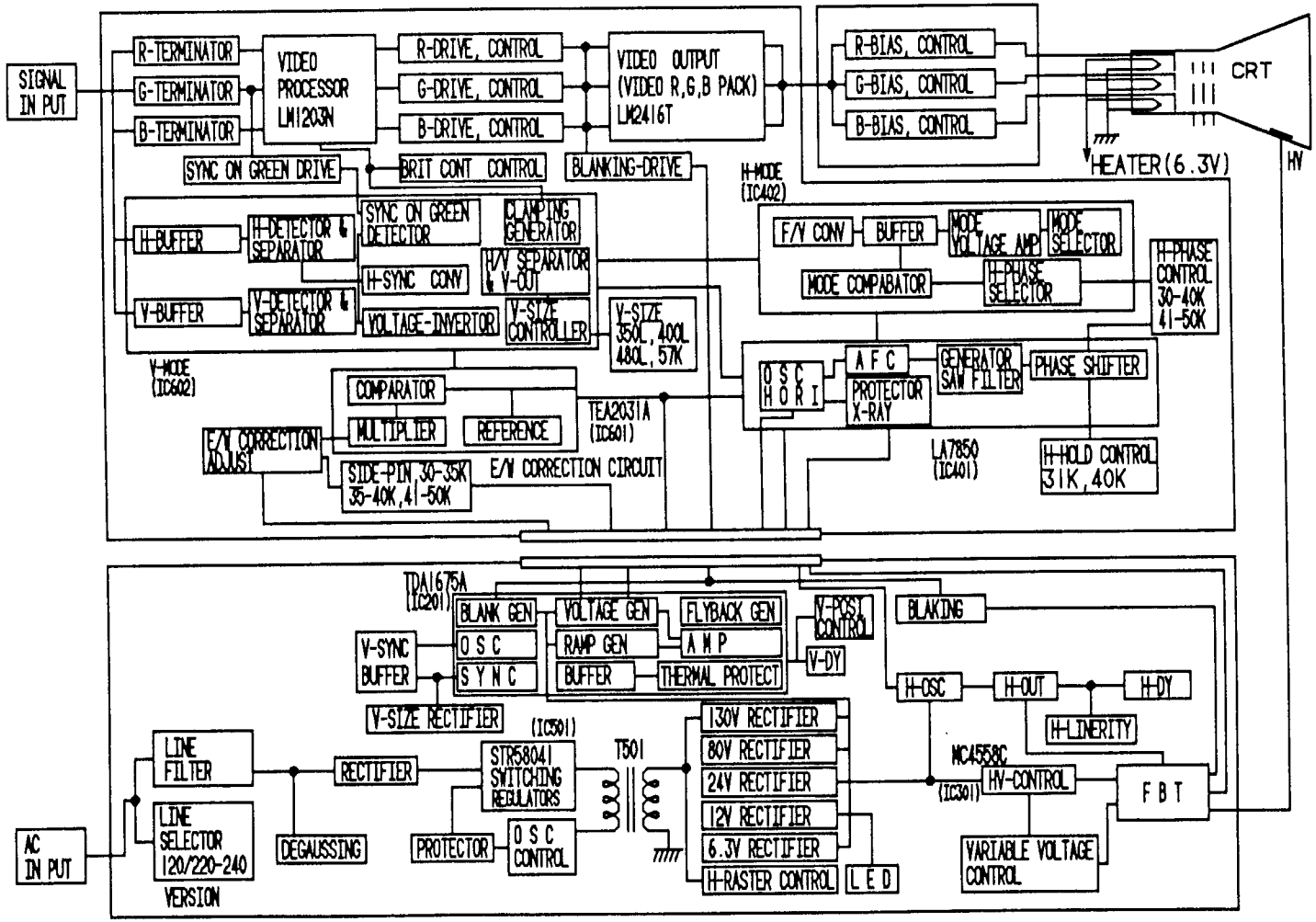

## MAIN PCB ( TOP VIEW )

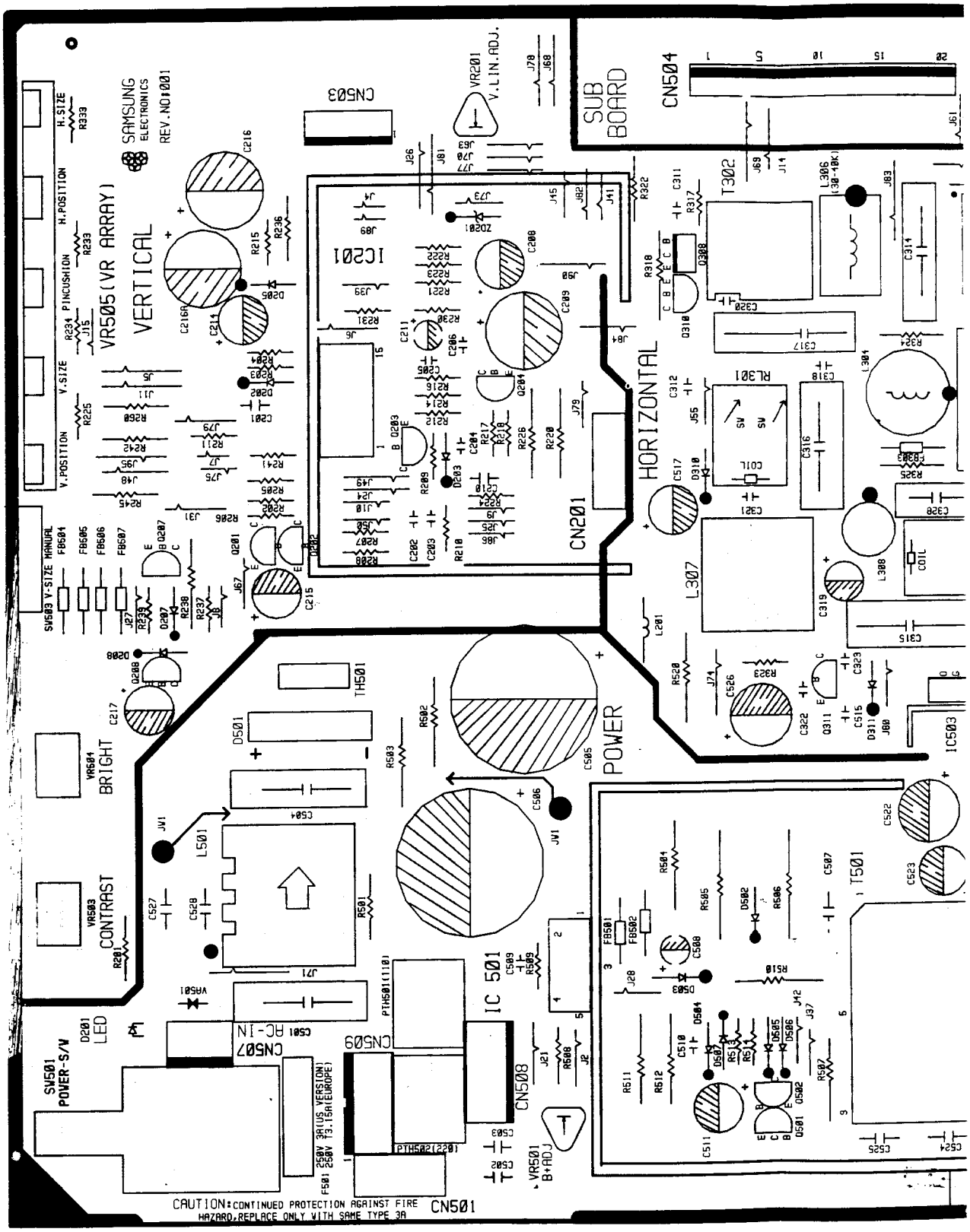

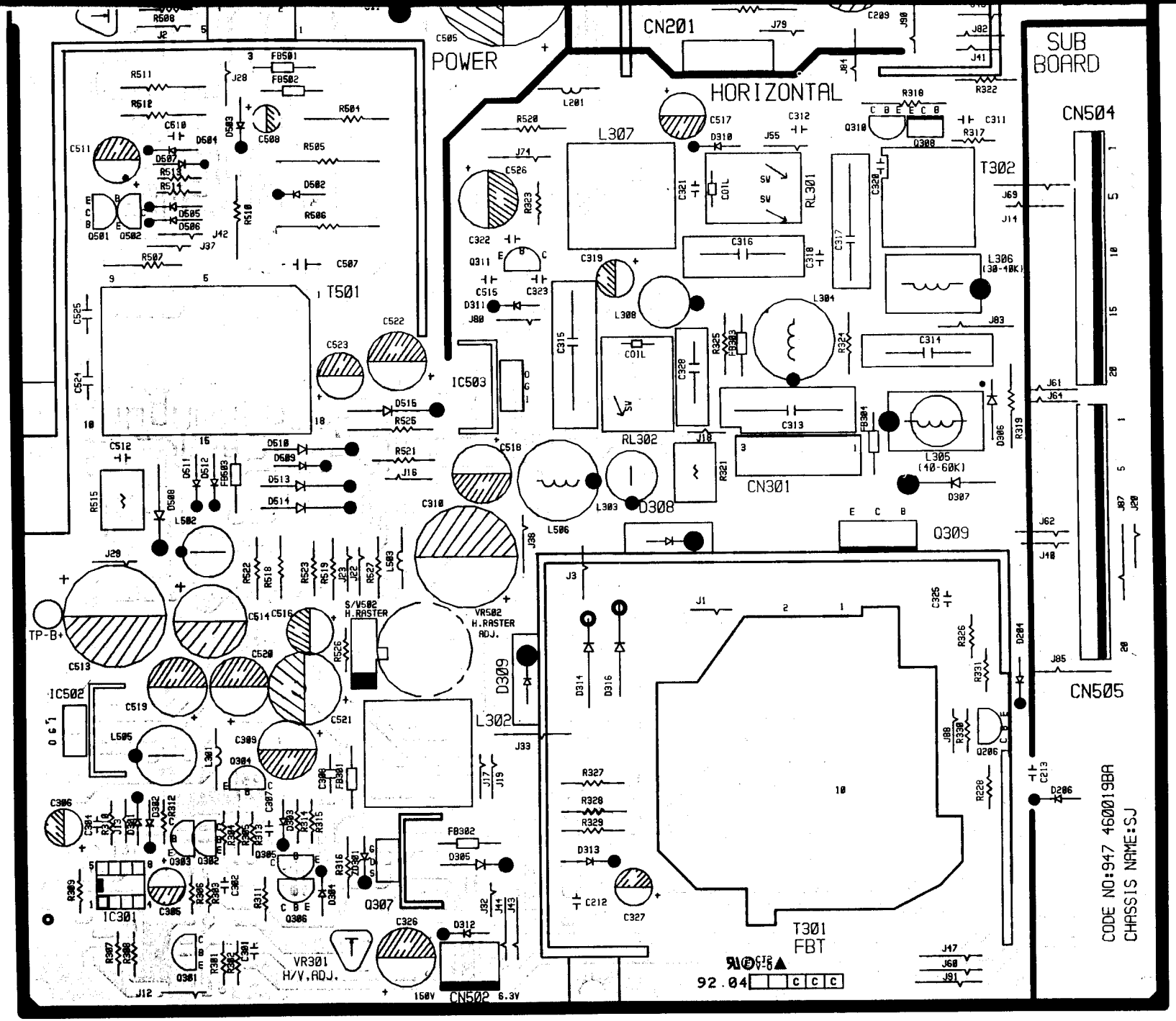
POWER
HORIZONTAL
SUB BOARD
CN201
CN504
CN505
CN301
CN502
T501
T302
T301
FBT
IC503
IC502
IC301
L307
L302
L306 (30-40K)
L305 (40-60K)
RL301
RL302
Q309
D308
D309
VR502 H.RASTER ADJ.
S/V502 H.RASTER
VR301 H/V.ADJ.
TP-B+
92.04
CODE NO:947 460019BA
CHASSIS NAME:SJ

## MAIN PCB ( TOP VIEW )

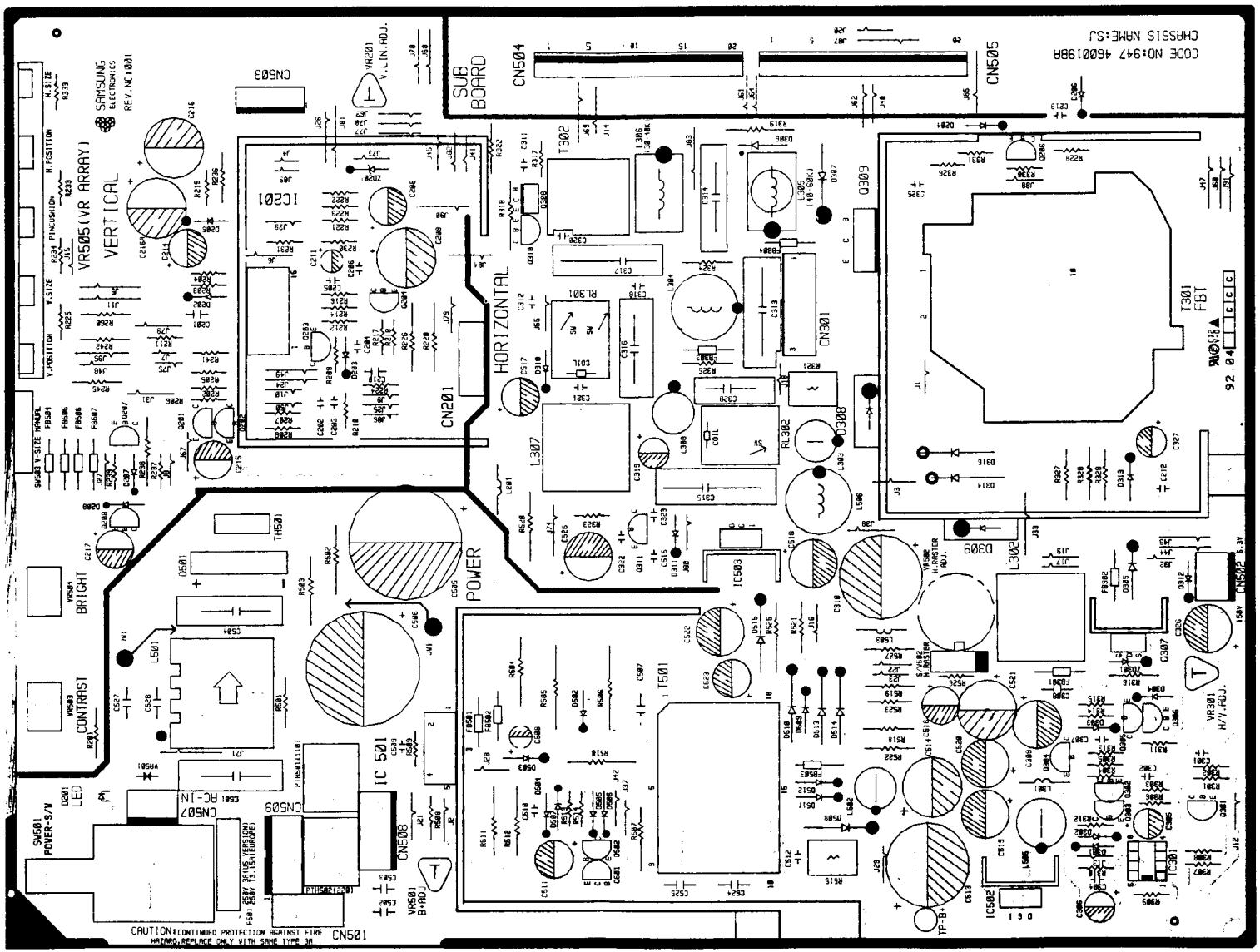

## MAIN PCB ( BOTTOM VIEW )

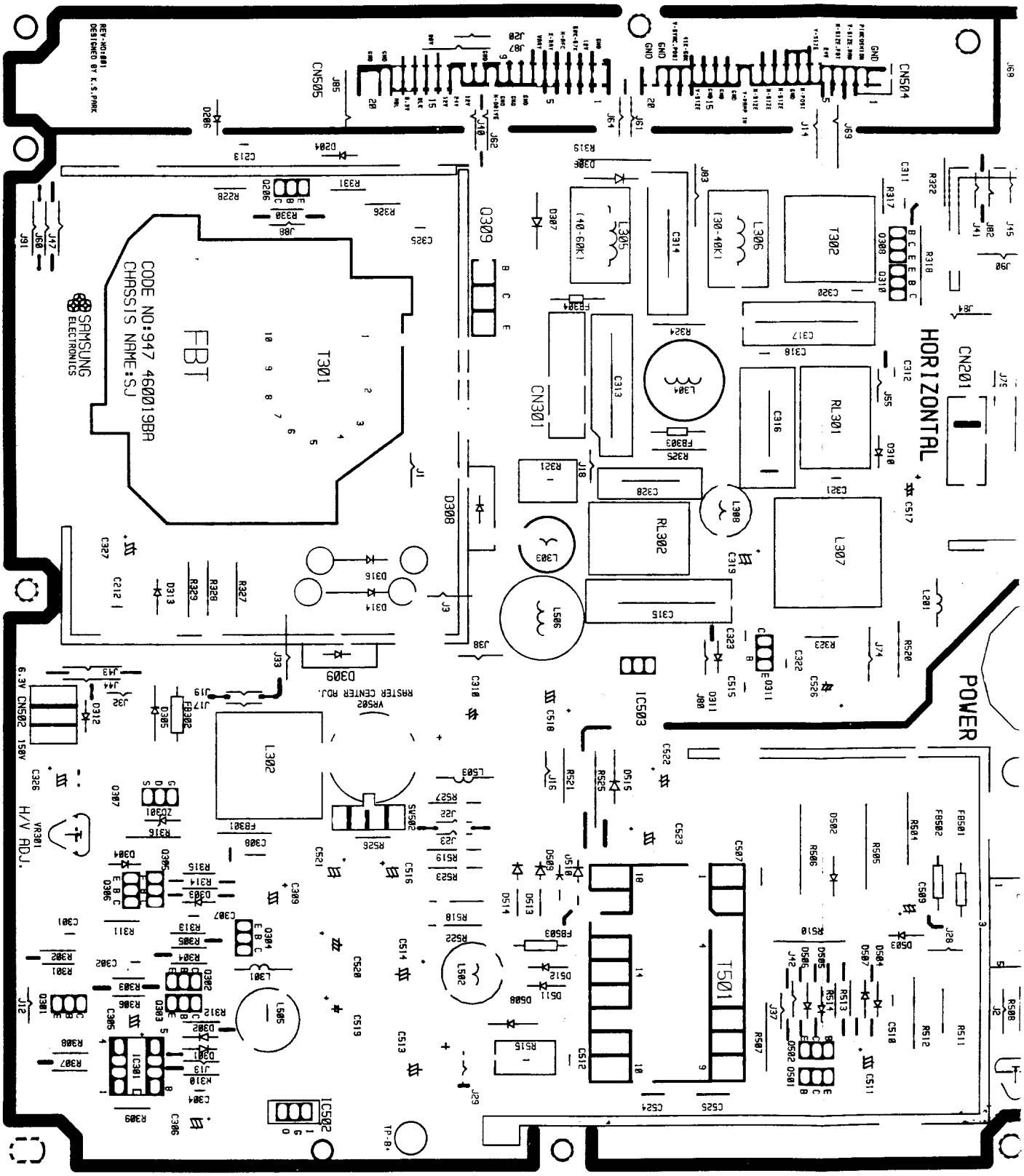

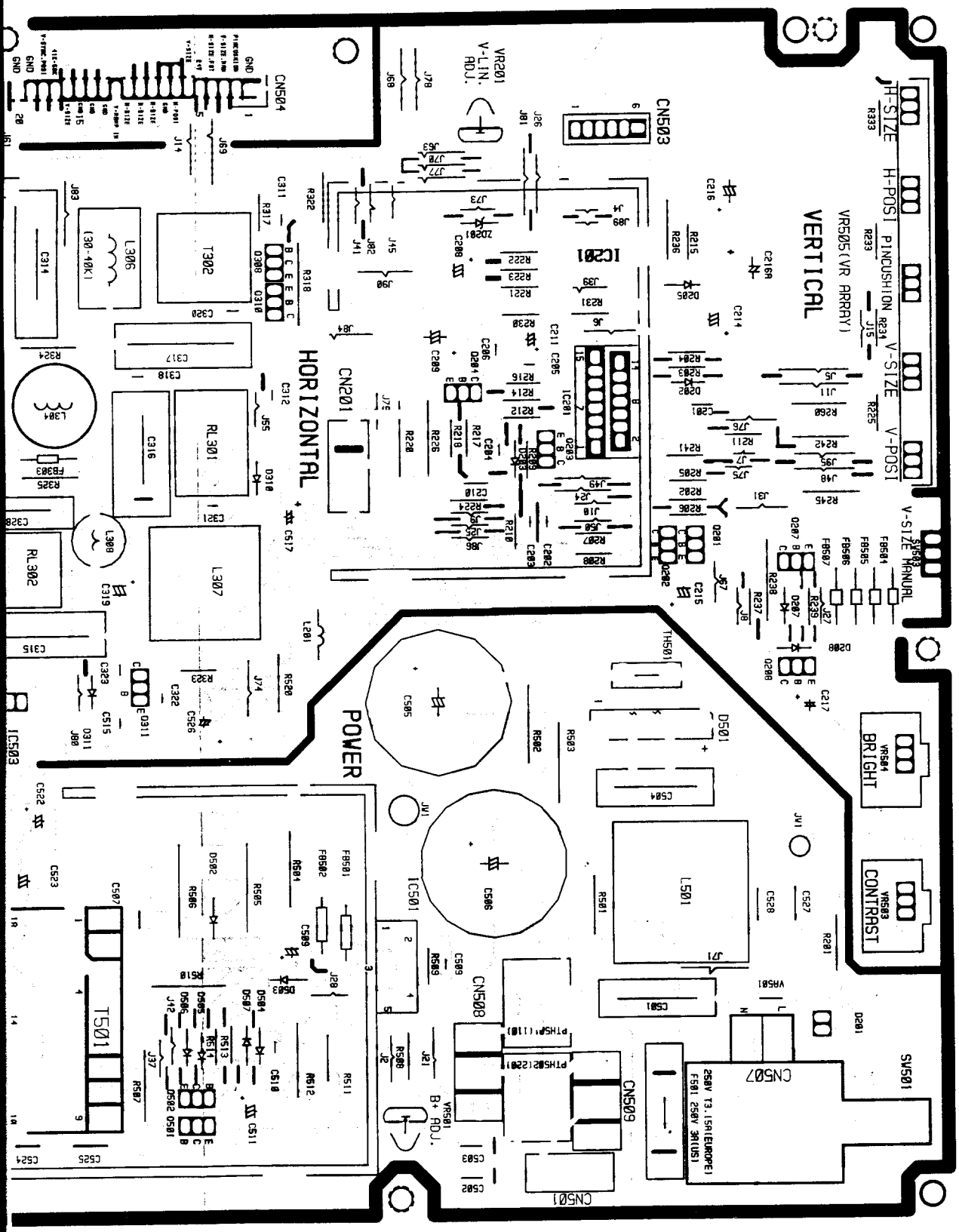
H-SIZE
H-POST
PINCUSHION
V-SIZE
V-POST
VR505(VR ARRAY)
VERTICAL
VR201
V-LIN.
ADJ.
CN503
CN504
CN201
IC201
HORIZONTAL
T302
L306
(30-40K)
RL301
RL302
L307
L304
L308
POWER
IC501
CN508
CN509
CN507
CN501
L501
T501
TH501
D501
VR501
B+ ADJ.
VR504
BRIGHT
VR503
CONTRAST
V-SIZE MANUAL
SW501
F501 250V T3.15A(EUROPE)
250V 3A(US)

MAIN PCB ( BOTTOM VIEW )

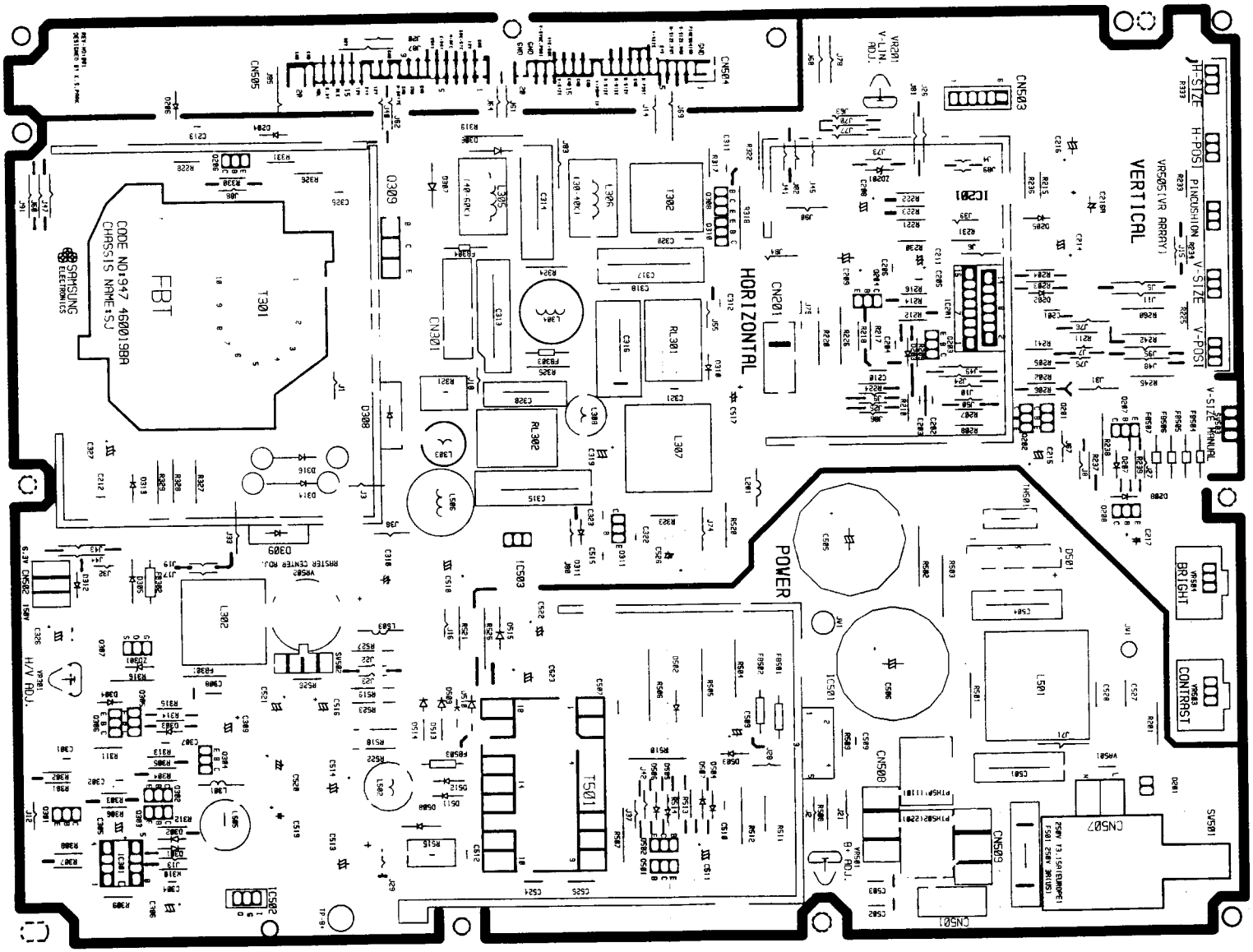

# VIDEO PCB ( TOP VIEW )

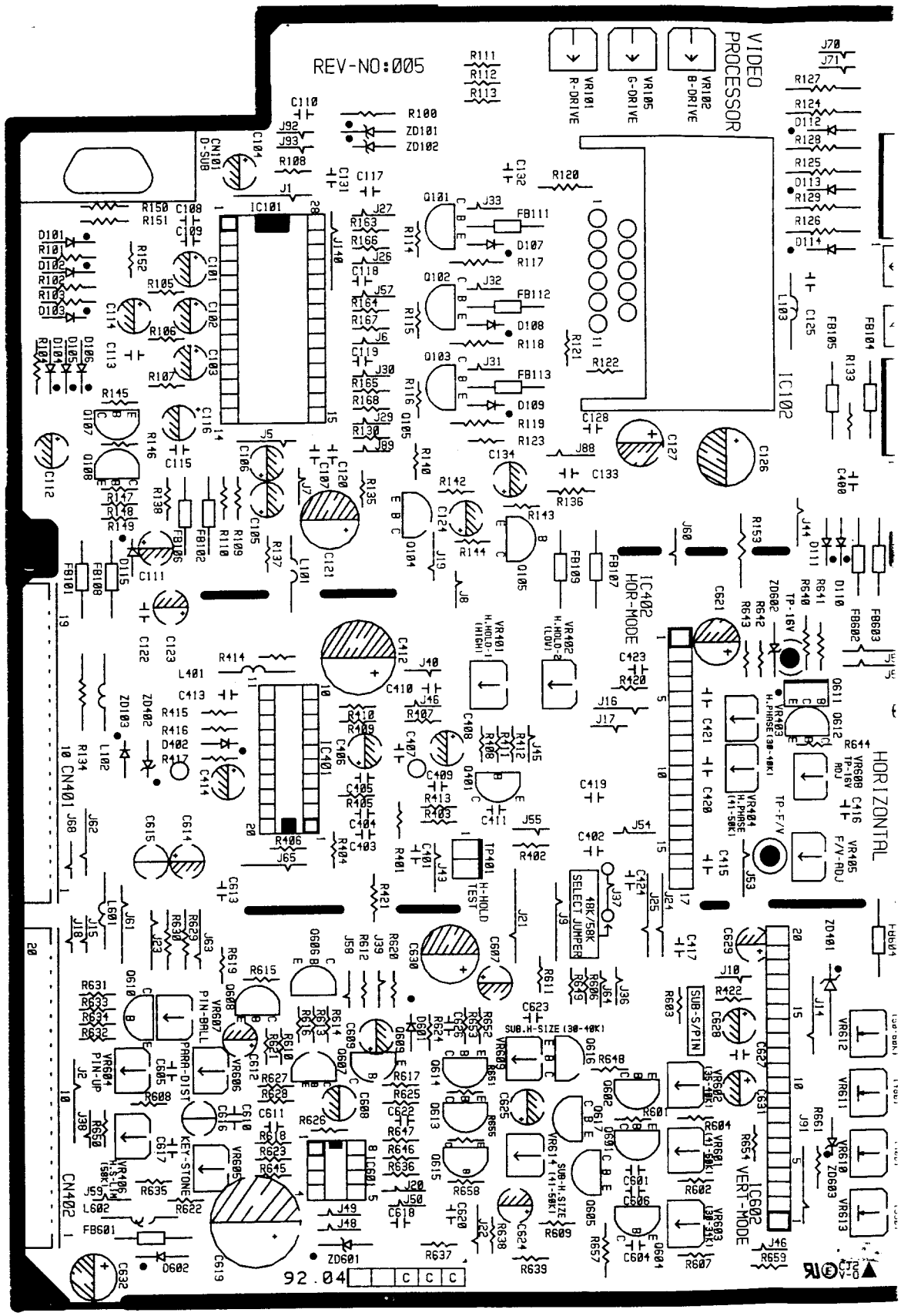

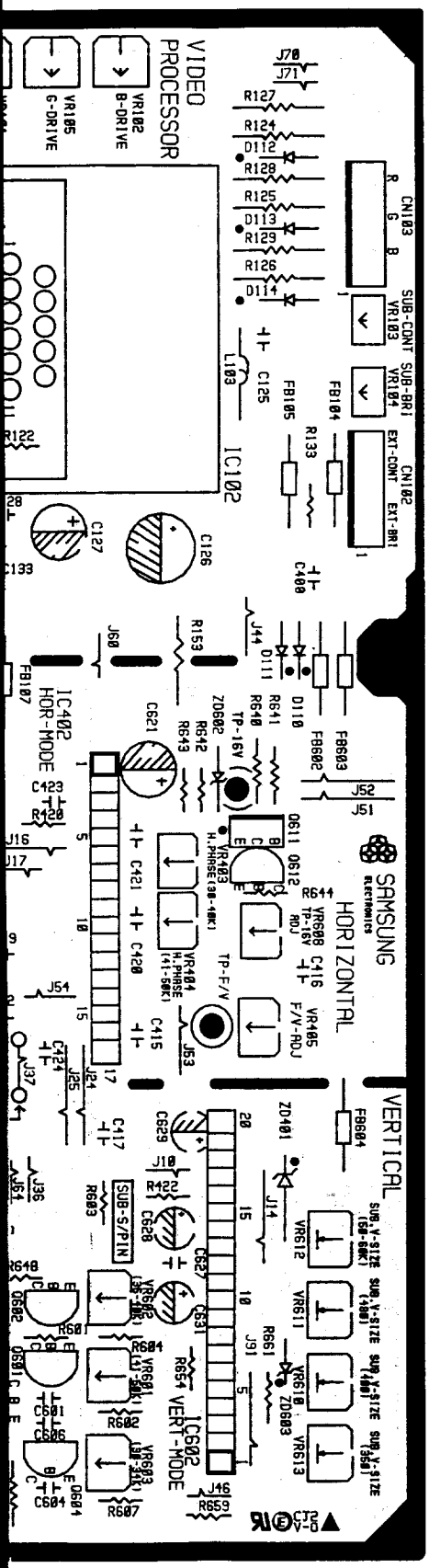


## CRT PCB ( TOP VIEW )

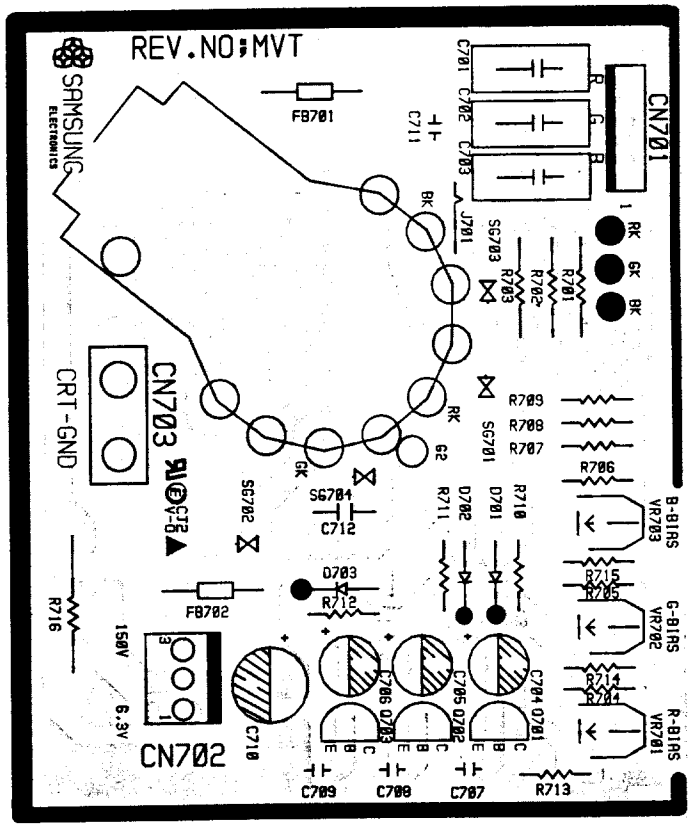

## VIDEO PCB ( TOP VIEW )

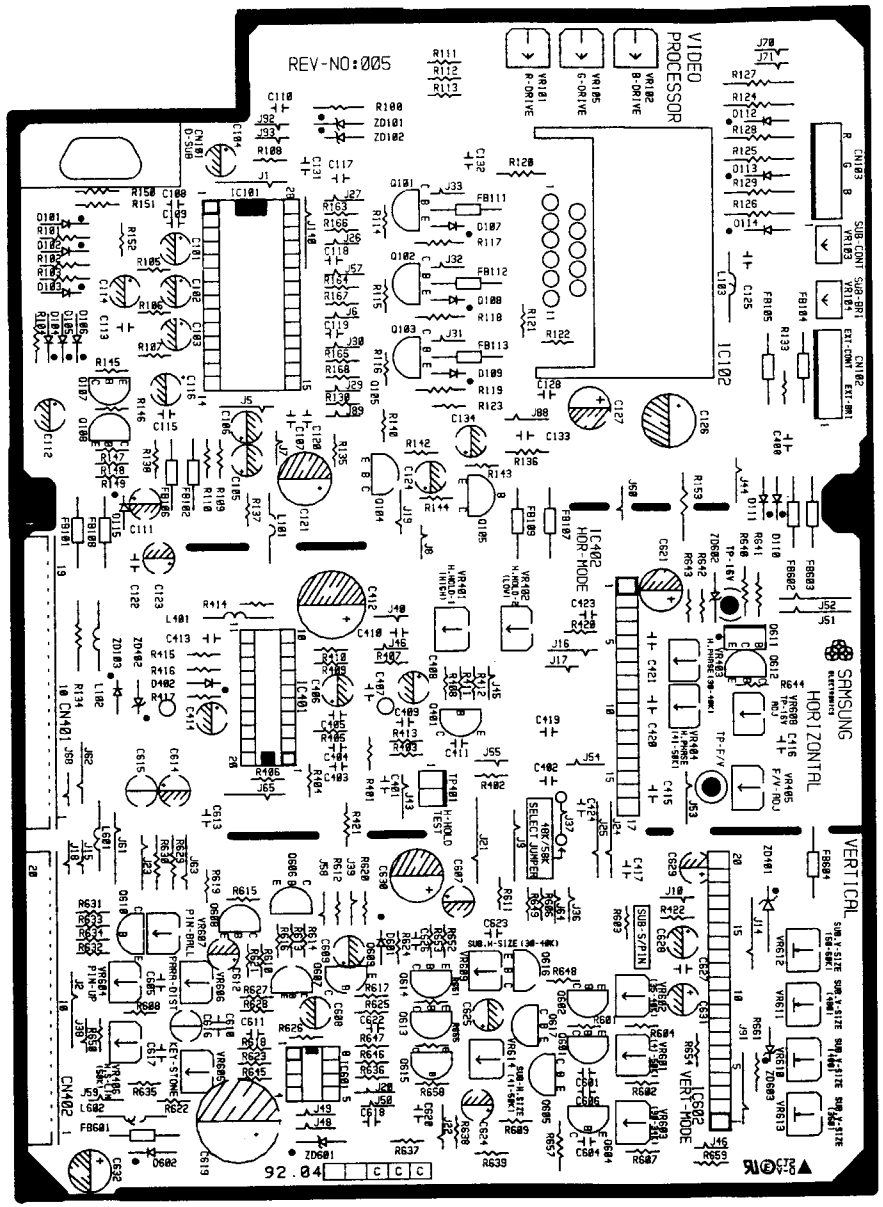


## CRT PCB ( TOP VIEW )

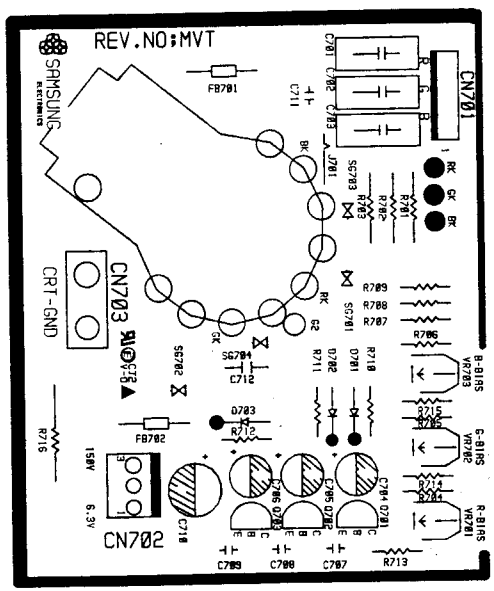

# CRT PCB ( BOTTOM VIEW )

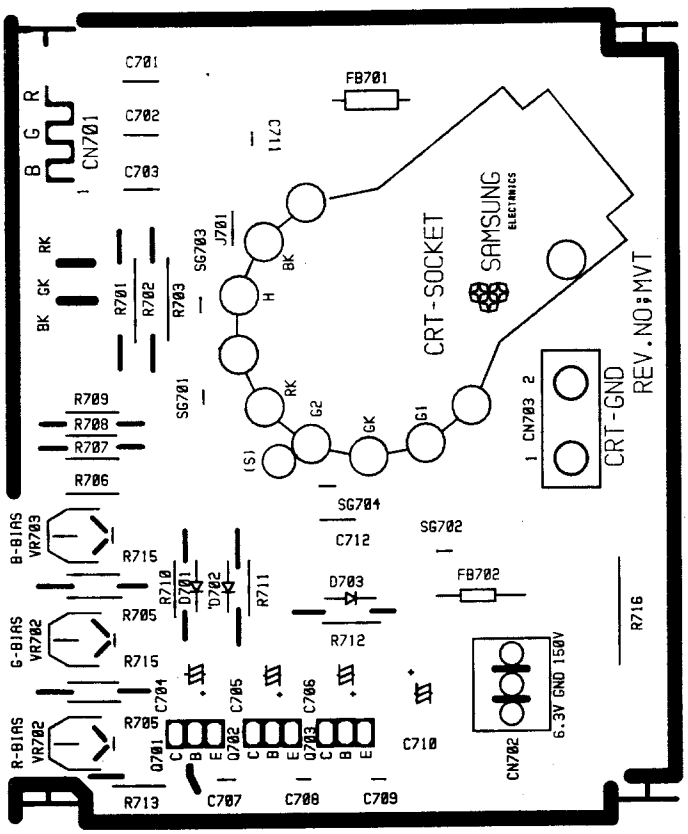


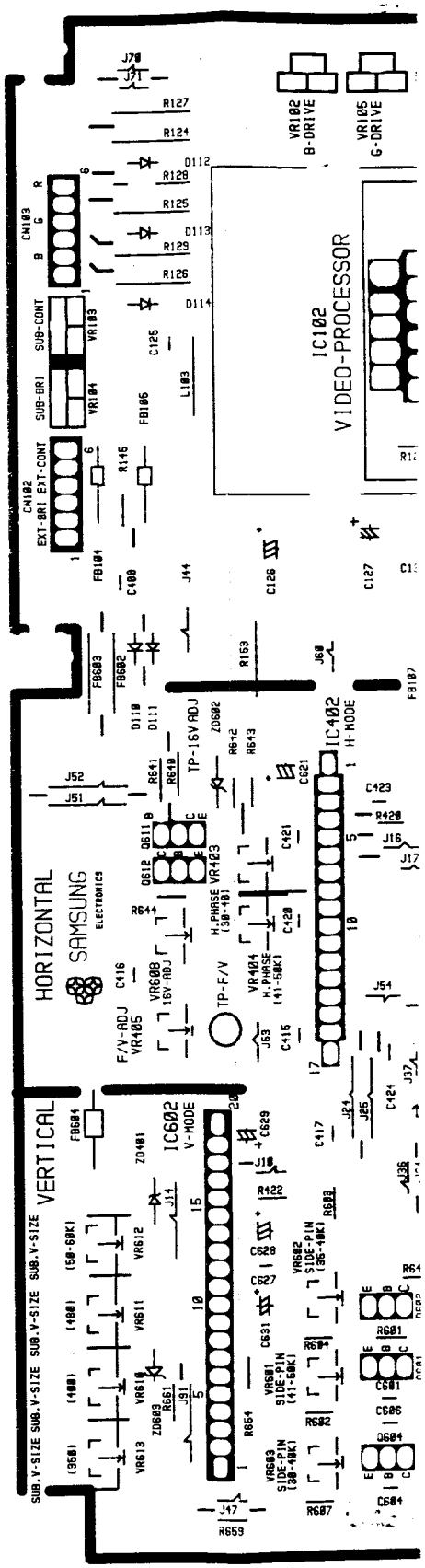

# VIDEO PCB ( BOTTOM VIEW )

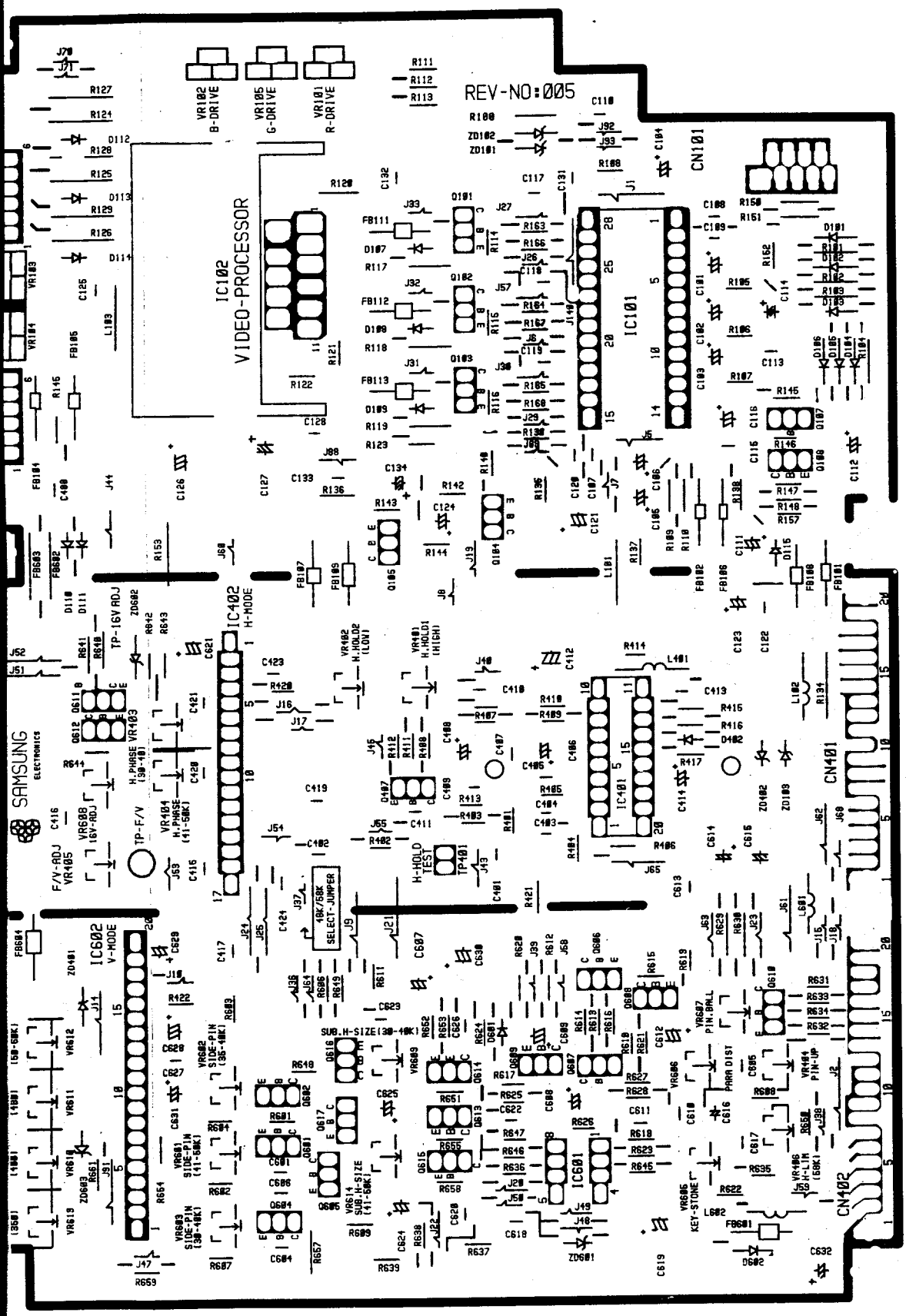

## CRT PCB ( BOTTOM VIEW )

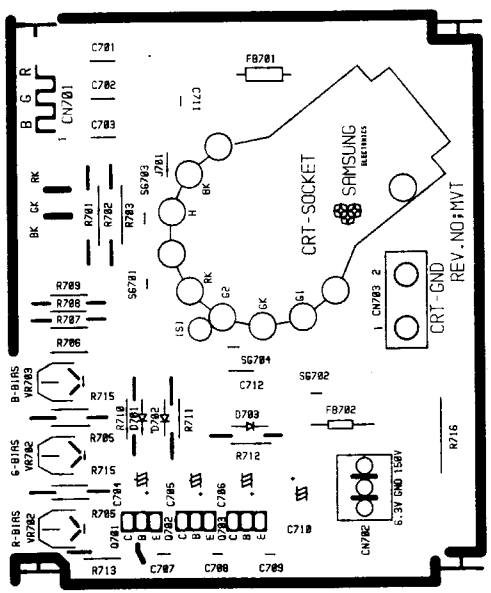


## VIDEO PCB ( BOTTOM VIEW )

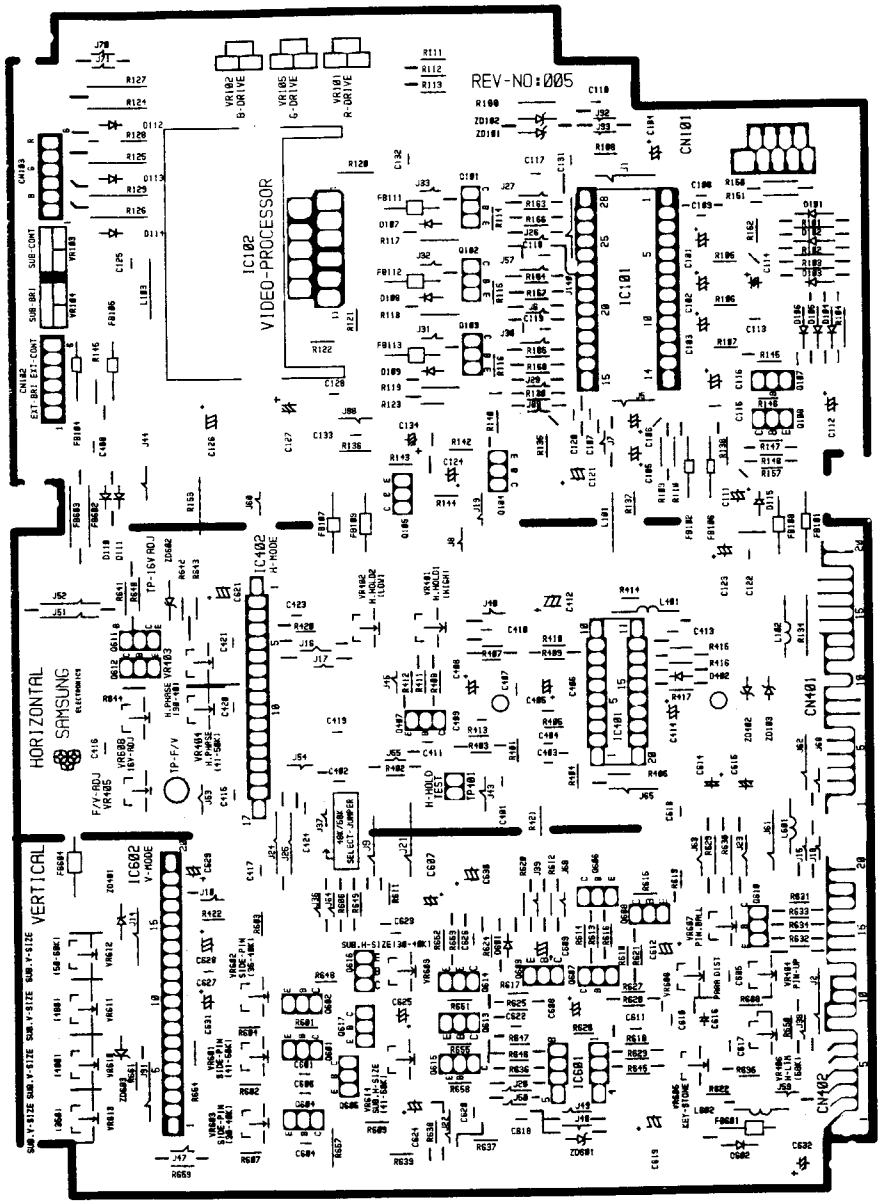

# SCHEMATIC DIAGRAM

MODEL NO: CSJ4927

CHASSIS NO: MAIN BOARD (REV-NO: 0004)

WARNING : THIS EPUIPMENT CONTAINS SAFETY CRITICAL COMPONENTS. ALL PARTS SHOWN IN THE SHADED AREAS OF THE SCHEMATIC ARE IMPORTANT TO SAFETY. REPLACE SAFETY-CRITICAL COMPONENT ONLY WITH MANUFACTURES RECOMMENDED PARTS LIST FOR EXACT REPLACEMENTS

CAUTION : THE SHADED AREA AND MARKS IN THE SCHEMATIC DIAGRAM AND PARTS LIST COMPONENTS THAT HAVE SPECIAL CHARACTERISTICS IMPORTANT IN THE ORIGINAL CIRCUIT OR SPECIFIED IN THE PARTS LIST BEFORE REPLACING ANY OF THESE COMPONENTS READ CAREFULLY THE PRODUCT NOTICE.

NOTE ;
1. RESISTANCE IS SHOWN IN OHM K=1,000 M=1,000,000. RATED POWER OF RESISTOR NOT NOTED SCHEMATIC DIAGRAM IS 1/8W.
2. CAPACITANCE IS SHOWN IN U OR OTHERS=UF, P=PF. RATED VOLTAGE OF CAPACITORS NOT NOTED IN SCHEMATIC DIAGRAM IS 50 VOLTS.
3. VOLTAGE IS READ WITH V.T.V.M FROM INDICATED POINT TO SIGNAL GROUND AND WAVEFORM TAKEN USING PERSONAL WITH ALL.
4. ABBREVIATION AND SYMBOL.
   CP=COMPOSITION. MO=METAL OXIDE. C=CEMENT.
   RW=WIRE RESISTOR.NP=NON POLAR CAPACITOR.
   MPP=METALIEZED POLYPROPYLENE. T=TANTAL.
   P=POLYESTER. PP=POLYPROPYLENE.
   MP=METAL POLYESTER.PT=POLYSYTRENE.
   MPE=METAL POLYETHYLENE.
5. THIS SCHEMATIC DIAGRAM IS SUBJECT TO CHANGE WITHOUT NOTICE FOR FAR FURTHER IMPROVEMENT.

WAVE-FORM *TEST MODE: 48.5KHZ

| | | | | | | | |
|---|---|---|---|---|---|---|---|
| 1 | 380VP-P (H) | 2 | 960VP-P (H) | 3 | 159VP-P (H) | 4 | 3.96VP-P (H) |
| 5 | 10.2VP-P (H) | 6 | 9.8VP-P (H) | 7 | 366VP-P (H) | 8 | 42VP-P (V) |
| 9 | 1.7VP-P (V) | 10 | 1.06VP-P (V) | 11 | 34.2VP-P (H) | 12 | 160VP-P (H) |

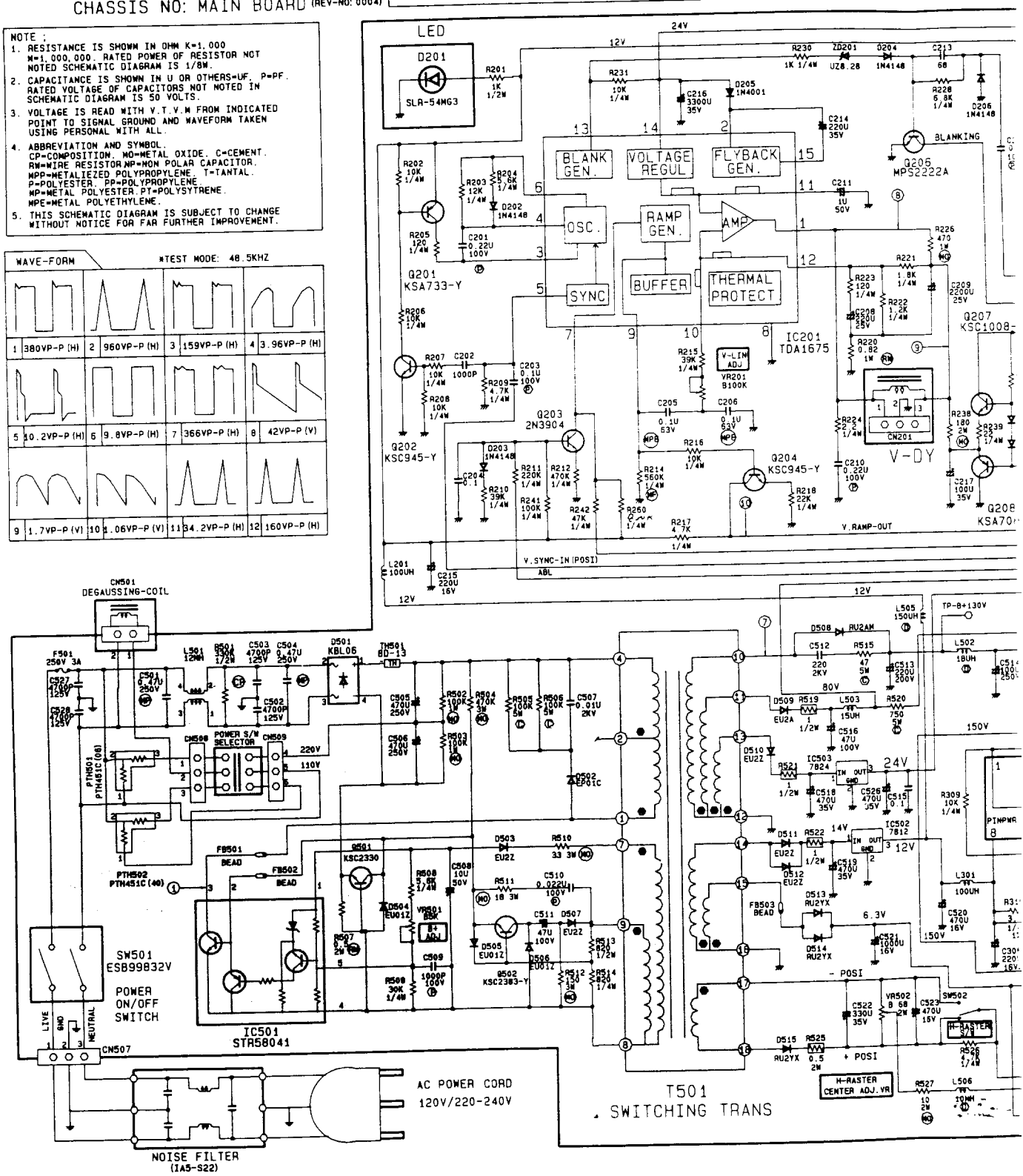

N : THE SHADED AREA AND MARKS IN THE
IC DIAGRAM AND PARTS LIST COMPONENTS THAT
PECIAL CHARACTERISTICS IMPORTANT IN THE
L CIRCUIT OR SPECIFIED IN THE PARTS LIST.
REPLACING ANY OF THESE COMPONENTS READ
LY THE PRODUCT NOTICE.

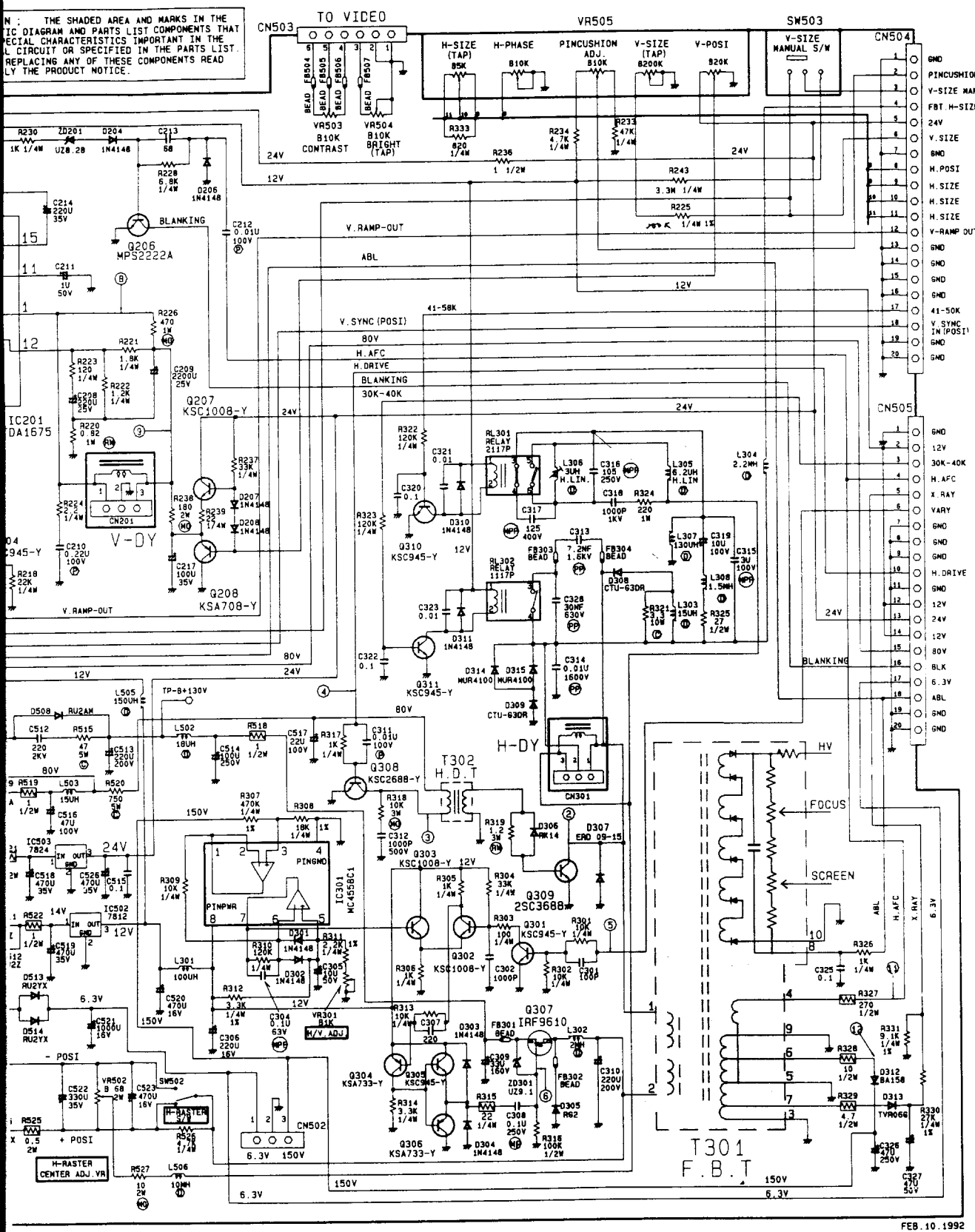


FEB.10.1992

# SCHEMATIC DIAGRAM

MODEL NO: CSJ4927

CHASSIS NO: MAIN BOARD (REV-NO: 0004)

WARNING : THIS EPUIPMENT CONTAINS SAFETY CRITICAL COMPONENTS. ALL PARTS SHOWN IN THE SHADED AREAS OF THE SCHEMATIC ARE IMPORTANT TO SAFETY. REPLACE SAFETY-CRITICAL COMPONENT ONLY WITH MANUFACTURES RECOMMENDED PARTS LIST FOR EXACT REPLACEMENTS

CAUTION : THE SHADED AREA AND MARKS IN THE SCHEMATIC DIAGRAM AND PARTS LIST COMPONENTS THAT HAVE SPECIAL CHARACTERISTICS IMPORTANT IN THE ORIGINAL CIRCUIT OR SPECIFIED IN THE PARTS LIST BEFORE REPLACING ANY OF THESE COMPONENTS READ CAREFULLY THE PRODUCT NOTICE

NOTE :
1. RESISTANCE IS SHOWN IN OHM K=1,000 M=1,000,000. RATED POWER OF RESISTOR NOT NOTED SCHEMATIC DIAGRAM IS 1/8W
2. CAPACITANCE IS SHOWN IN U OR OTHERS=UF, P=PF RATED VOLTAGE OF CAPACITORS NOT NOTED IN SCHEMATIC DIAGRAM IS 50 VOLTS
3. VOLTAGE IS READ WITH V T V M FROM INDICATED POINT TO SIGNAL GROUND AND WAVEFORM TAKEN USING PERSONAL WITH ALL
4. ABBREVIATION AND SYMBOL
CP=COMPOSITION, MO=METAL OXIDE, C=CEMENT
RW=WIRE RESISTOR NP=NON POLAR CAPACITOR
MPP=METALIZEZED POLYPROPYLENE, T=TANTAL
P=POLYESTER, PP=POLYPROPYLENE
MP=METAL POLYESTER PT=POLYSYTRENE
MPE=METAL POLYETHYLENE
5. THIS SCHEMATIC DIAGRAM IS SUBJECT TO CHANGE WITHOUT NOTICE FOR FAR FURTHER IMPROVEMENT

WAVE-FORM *TEST MODE: 48.5KHZ

| | | | |
|---|---|---|---|
| 1 380VP-P (H) | 2 960VP-P (H) | 3 159VP-P (H) | 4 3.96VP-P (H) |
| 5 10.2VP-P (H) | 6 9.8VP-P (H) | 7 368VP-P (H) | 8 42VP-P (V) |
| 9 1.7VP-P (V) | 10 5.06VP-P (V) | 11 34.2VP-P (H) | 12 160VP-P (H) |

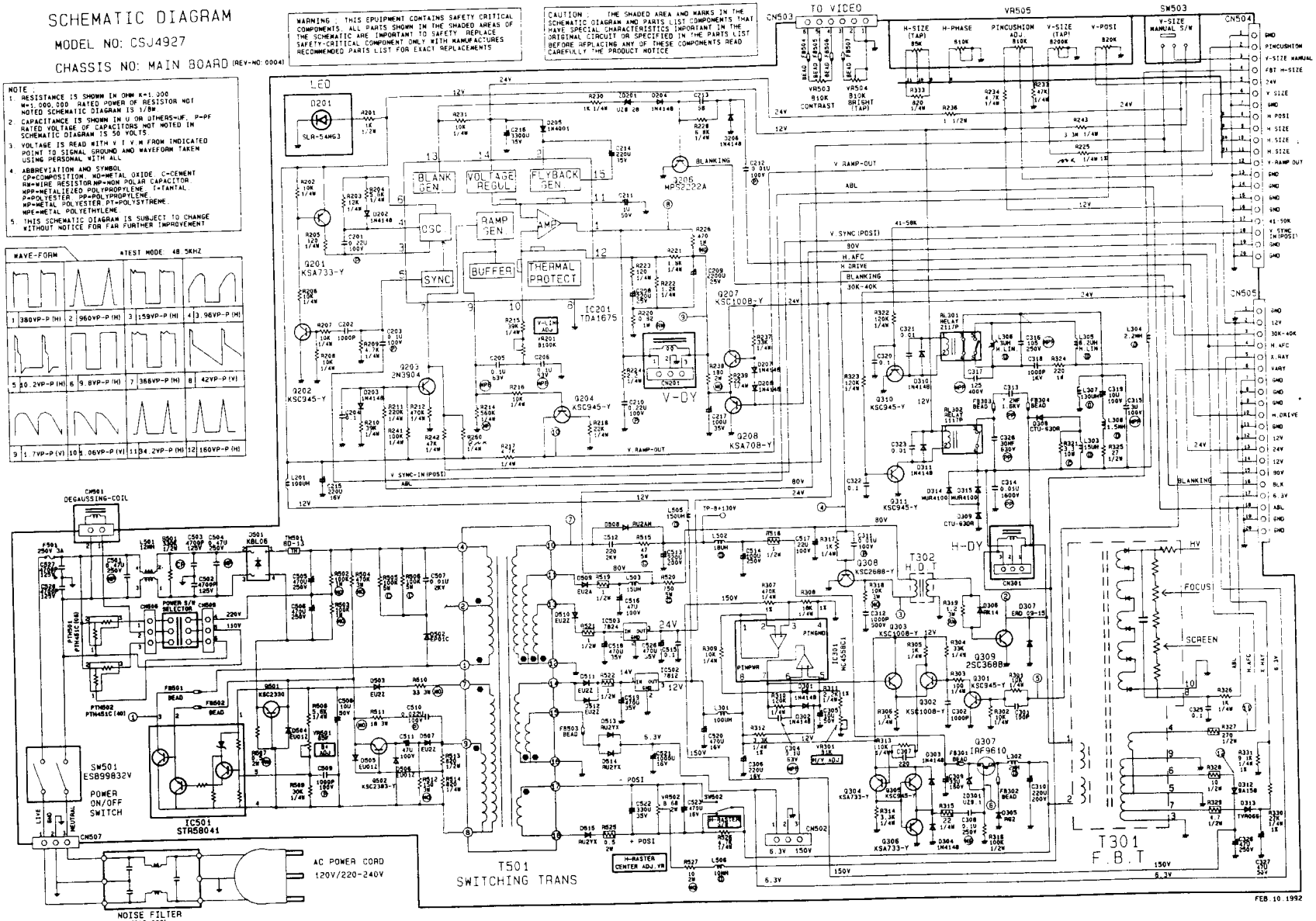

# SCHEMATIC DIAGRAM

MODEL NO: CSJ4927 (REV-NO: 0004)

CHASSIS NO: INTERFACE & VIDEO

WARNING : BEFORE SERVICING THIS CHASSIS , READ THE X-RAY RADIATION PRECAUTION AND PRODUCT SAFETY NOTICE IN THE MANUAL.

CAUTION : THE SHADED AREA AND MARK IN THE SCHEMATIC DIAGRAM AND PARTS LIST COMPONENT THA SPECIAL CHARACTERISTICS IMPORTANT IN THE ORIGINAL CIRCUIT OR SPECIFIED IN THE PA LIST. BEFORE REPLACING ANY OF THESE COMPONENTS READ CARAFULLY THE PRODUCT SAFETY NOT DEGRADE IN THE SAFETY OF THE EQUIPMENT THROUGH IMPROPER SERVICING.

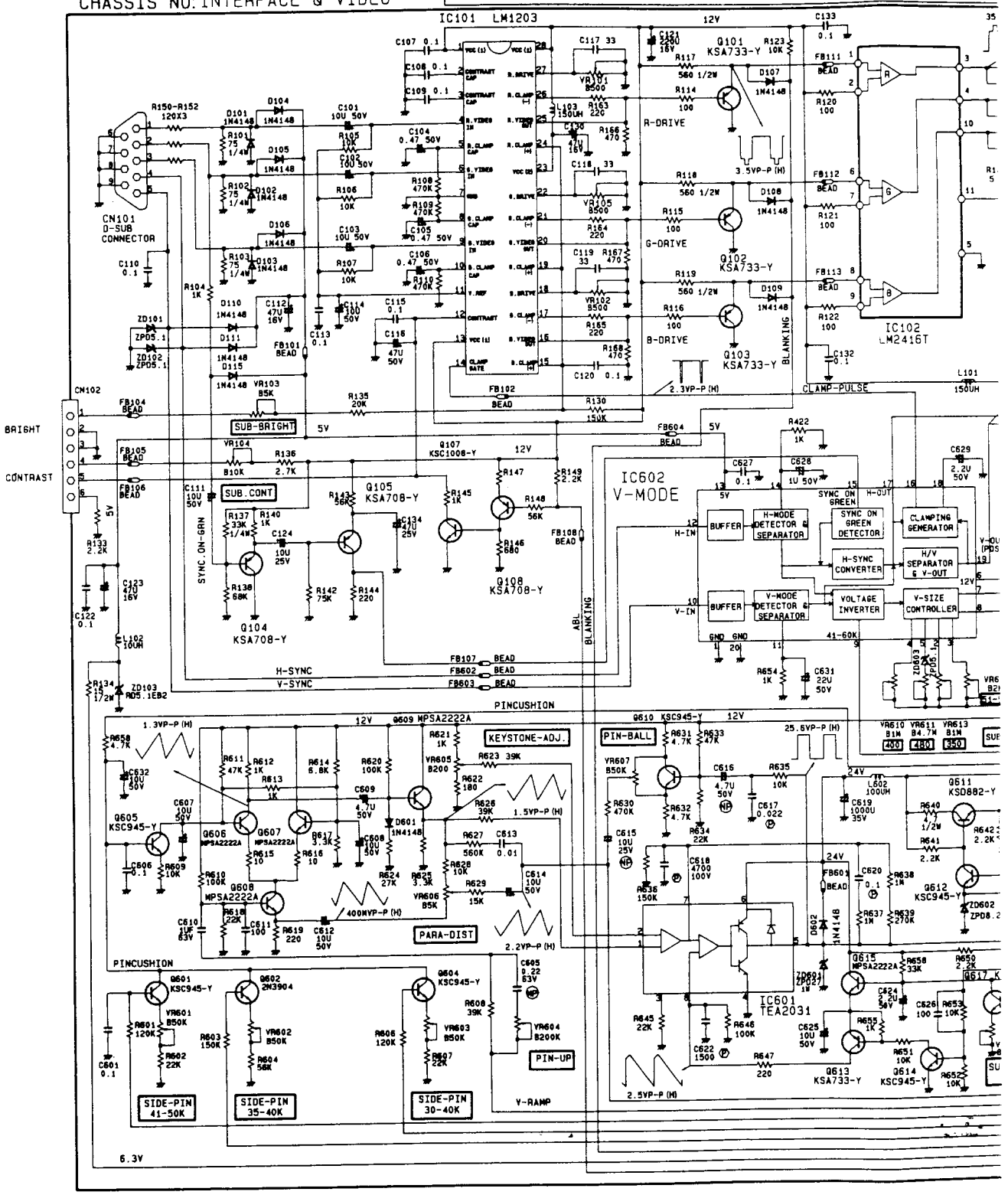

K-RAY
TICE IN THE MANUAL.

IC DIAGRAM AND PARTS LIST COMPONENT THAT HAVE
ORIGINAL CIRCUIT OR SPECIFIED IN THE PARTS
ENTS READ CARAFULLY THE PRODUCT SAFETY NOTICE. DO
THROUGH IMPROPER SERVICING.

NOTE: 1. RESISTANCE IS SHOWN IN OHM K=1.000, M=1.000.000 RATED POWER OF RESISTOR NOT NOTED IN SCHEMATIC DIAGRAM IS 1/8 WATTS.
2. CAPACITANCE IS SHOWN IN U OR OTHERS=UF, P=PF RATED VOLTAGE OF CAPACITORS NOT NOTED IN SCHEMATIC DIAGRAM IS 50 VOLTS.
3. VOLTAGE IS READ WITH V.T.V.M FROM INDICATED POINT TO SIGNAL GROUND AND WAVEFORM TAKEN USING PERSONAL WITH ALL
4. THIS SCHEMATIC DIAGRAM IS SUBJECT TO CHANGE WITHOUT NOTICE FOR FAR FURTHER IMPROVEMENT.
5. ABBREVIATION AND SYMBOL.
C=COMPOSITION, M=METAL OXIDE, RC=CEMENT, RW=WIRE RESISTOR, P=POLYESTER, PP=POLYPROPYLENE
MP=METAL POLYESTER, MPP=METALIEZED POLYPROPYLENE T=TANTAL, NP=NON POLAR CAPACITOR.

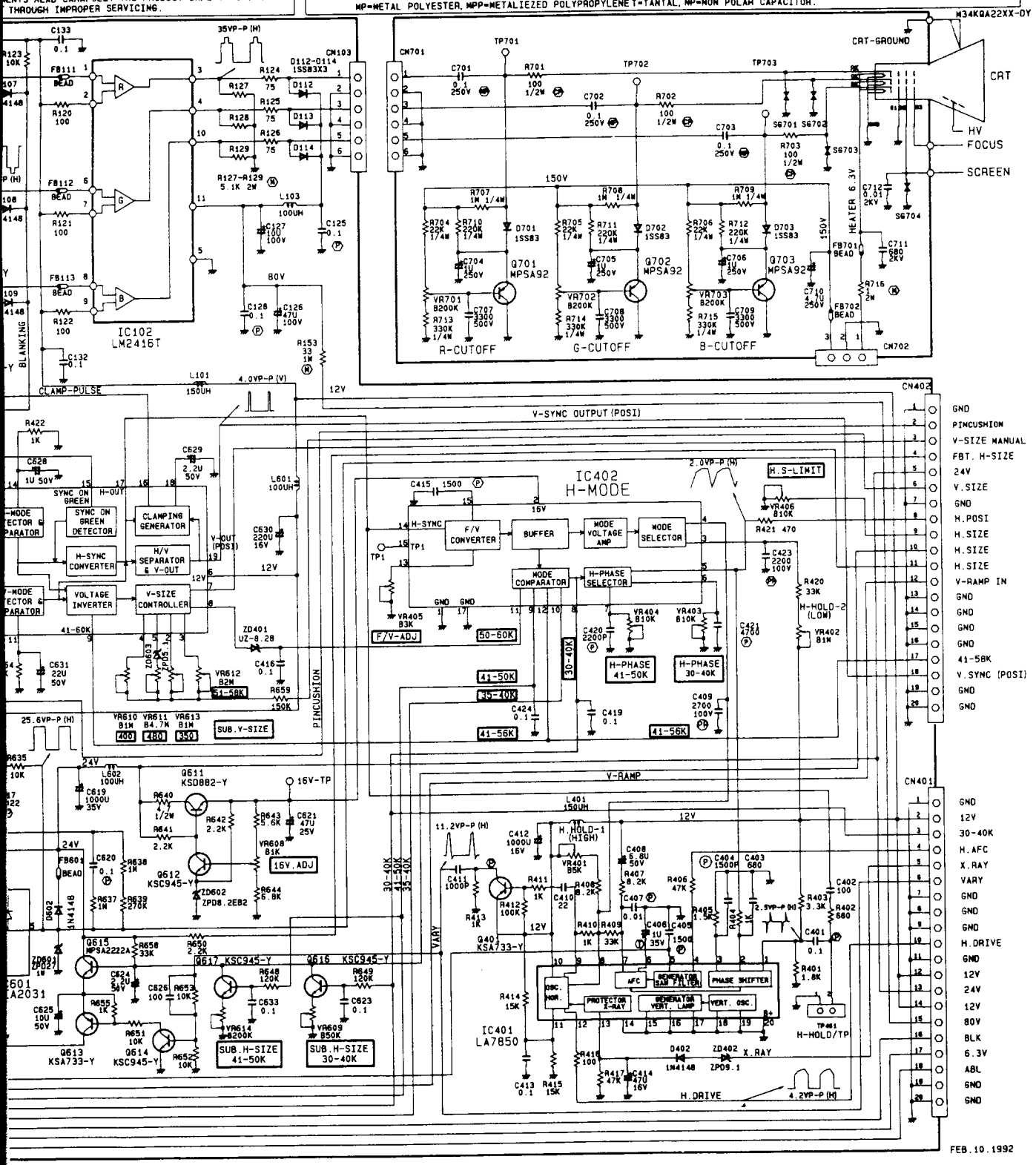

# SCHEMATIC DIAGRAM

MODEL NO: CSJ4927 (REV-NO: 0004)

CHASSIS NO: INTERFACE & VIDEO

WARNING : BEFORE SERVICING THIS CHASSIS , READ THE X-RAY RADIATION PRECAUTION AND PRODUCT SAFETY NOTICE IN THE MANUAL.

CAUTION : THE SHADED AREA AND MARK IN THE SCHEMATIC DIAGRAM AND PARTS LIST COMPONENT THAT HAVE SPECIAL CHARACTERISTICS IMPORTANT IN THE ORIGINAL CIRCUIT OR SPECIFIED IN THE PARTS LIST. BEFORE REPLACING ANY OF THESE COMPONENTS READ CARAFULLY THE PRODUCT SAFETY NOTICE. DO NOT DEGRADE IN THE SAFETY OF THE EQUIPMENT THROUGH IMPROPER SERVICING.

NOTE: 1 RESISTANCE IS SHOWN IN OHM K=1 000, M=1 000 000RATED POWER OF RESISTOR NOT NOTED IN SCHEMATIC DIAGRAM IS 1/8 WATTS.
2 CAPACITANCE IS SHOWN IM U OR OTHERS=UF, P=PF RATED VOLTAGE OF CAPACITORS NOT NOTED IN SCHEMATIC DIAGRAM IS 50 VOLTS.
3 VOLTAGE IS READ WITH V.T.V.M FROM INDICATED POINT TO SIGNAL GROUND AND WAVEFORM TAKEN USING PERSONAL WITH ALL
4 THIS SCHEMATIC DIAGRAM IS SUBJECT TO CHANGE WITHOUT NOTICE FOR FAR FURTHER IMPROVEMENT
5 ABBREVIATION AND SYMBOL.
C=COMPOSITION, M=METAL OXIDE, RC=CEMENT, MW=WIRE RESISTOR, P=POLYESTER, PP=POLYPROPYLEME
MP=METAL POLYESTER, MPP=METALIZED POLYPROPYLEME T=TANTAL, NP=NON POLAR CAPACITOR

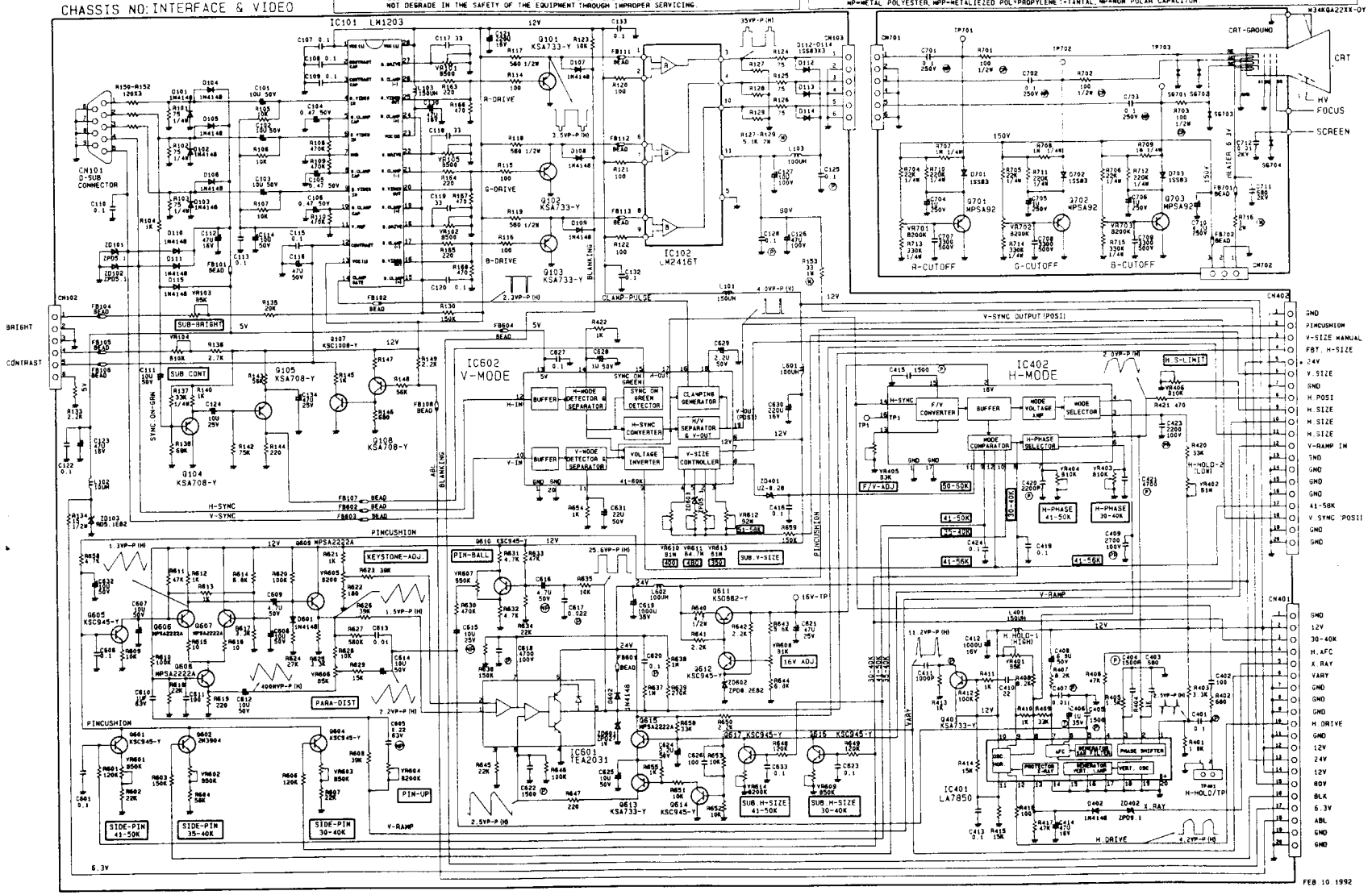

# SEMICONDUCTOR LEAD IDENTIFICATION
## MAIN VIEW

| PARTS | TYPE NO | REF NO | PARTS | TYPE NO | REF NO |
|---|---|---|---|---|---|
| | KSC1008-Y<br>KSA708-Y<br>KSC945-Y<br><br>KSA733-Y<br>2N3904<br>MPSA92<br>MPS 2222A | Q207,303,302<br>Q208<br>Q310,311,301,305<br>Q204,202<br>Q201,304,306,101,102,103<br>Q203<br>Q701,702,703<br>Q206 | 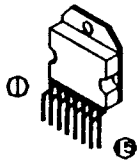 | TDA1675A | IC201 |
| | 2SC2383-Y<br>2SC2330-Y | Q502<br>Q501 | 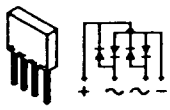 | KBL06 | D501 |
| | 2SC3688 | Q309 | 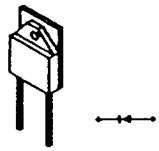 | CTUG3DR | D308<br>D309 |
| 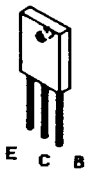  | 2SC2688-Y | Q308 | 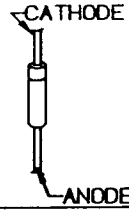  | MUR4100<br>ERD09-15<br>RK-14<br>RG-2<br>RU2YX<br>RU2AM | D314,316<br>D307<br>D306<br>D305<br>D513,514,515<br>D508 |
| | MC7812C<br>MC7824C | IC502<br>IC503 | 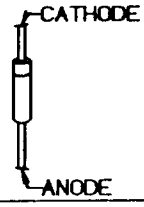  | IN4001<br>BA158GP<br>TVR-06G<br>EP01C<br>EU2Z<br><br>EU1Z<br>EU2A | D205<br>D312<br>D313<br>D502<br>D503,507,510,511<br>D512<br>D504,505,506<br>D509 |
| 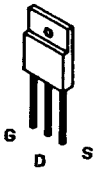  | IRF9610 | Q307 | 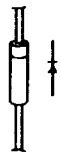 | IN4148<br><br>ISS83 | D202,203,204,206<br>D207,208,301,302<br>D303,304,310,311<br>D107,108,109<br>D701,702,703 |
| | STR58041 | IC501 | 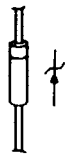 | UZ-8.28BL<br>UZ-9.1BM | ZD201<br>ZD301 |
| | MC4558C | IC301 | | | |

# SEMICONDUCTOR LEAD IDENTIFICATION

## VIDEO VIEW

| PARTS | TYPE NO | REF NO | PARTS | TYPE NO | REF NO |
|---|---|---|---|---|---|
| | KSC1008-Y<br>KSA708-Y<br>KSC945-Y<br><br>KSA733-Y<br>2N3904<br>MPS 2907A<br>MPS 2222A | Q107<br>Q108<br>Q612,601,604,605,616<br>Q614,610<br>Q401,613<br>Q602<br>Q104,105<br>Q615,609,607,606<br>Q608,206 | | V-MODE<br>HYBRID | IC602 |
| | KSD882-Y | Q611 | 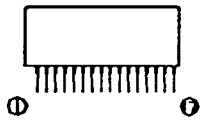 | H-MODE<br>HYBRID | IC402 |
| | TEA2031A | IC601 | 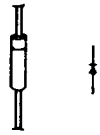 | IN4148 | D101,102,103,104<br>D105,106,107,108<br>D109,110,112,114<br>D117,118,119,402<br>D601,602,603 |
| 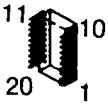 | LA7850 | IC401 | | ISS83 | D112,113,114 |
| 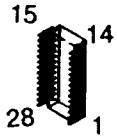 | LM1203 | IC101 | 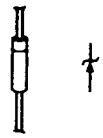 | UZ-8.28BL<br>UZ-5.1B<br>UZ-9.1BM<br>UZP-27B | ZD101,401,602<br>ZD101,102,103<br>ZD402<br>ZD601 |
| 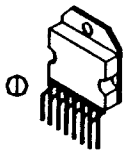 | LM2416T | IC102 | | | |